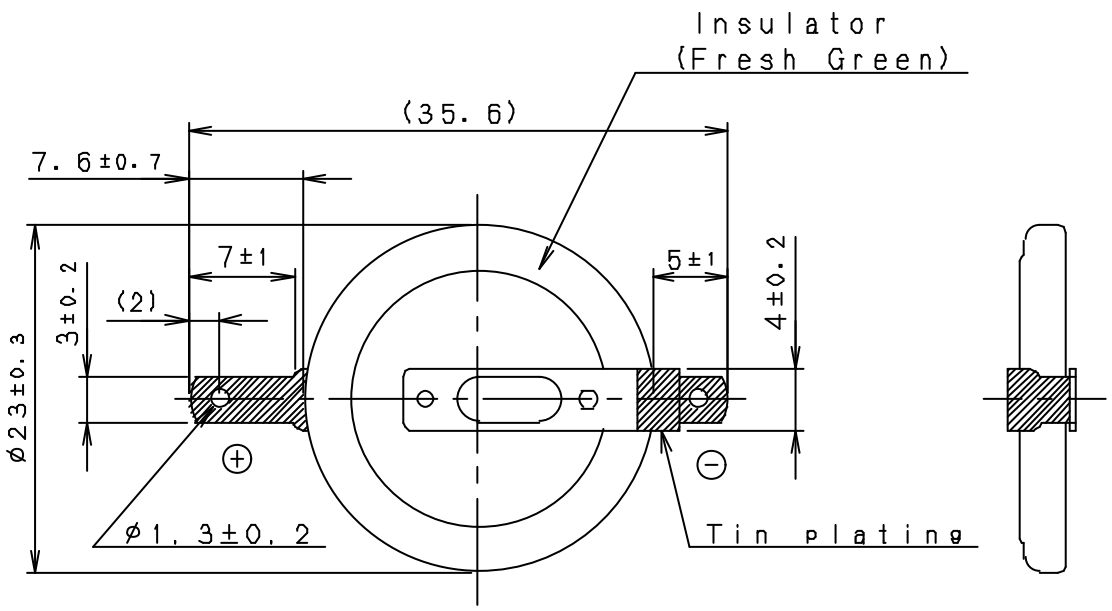

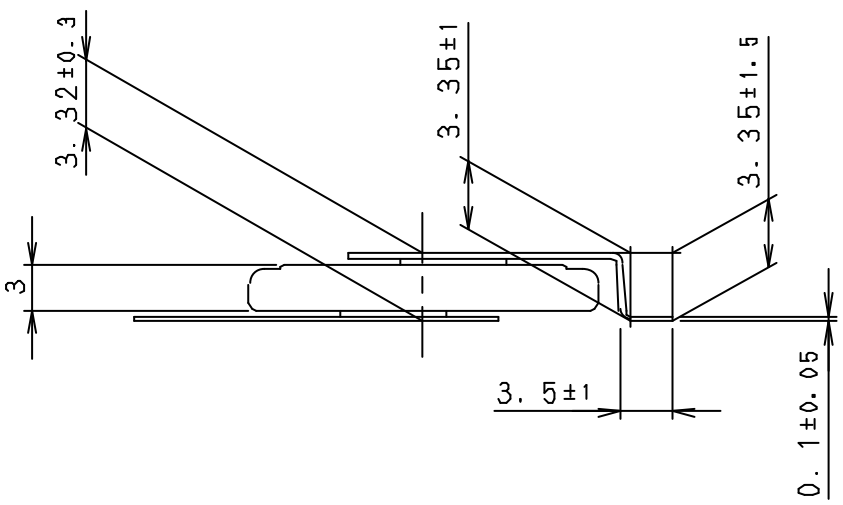

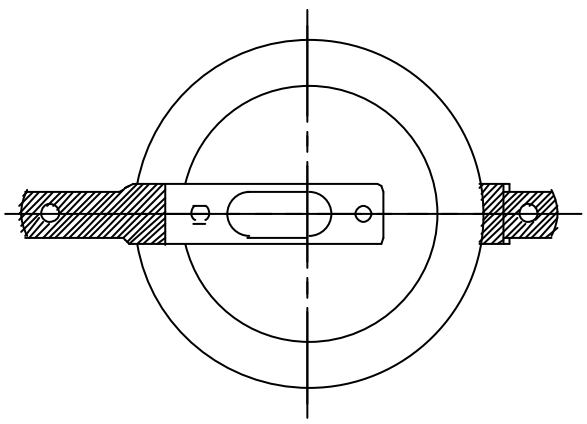

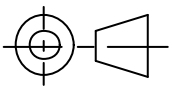

Unit:mm

Scale	2/1	Drawn	—	Designed		Checked		Approved		Name	BR2330A/FA
										No.	PS-B23540

Matsushita Battery Industrial Co.,Ltd. Lithium and Micro Battery Business Unit