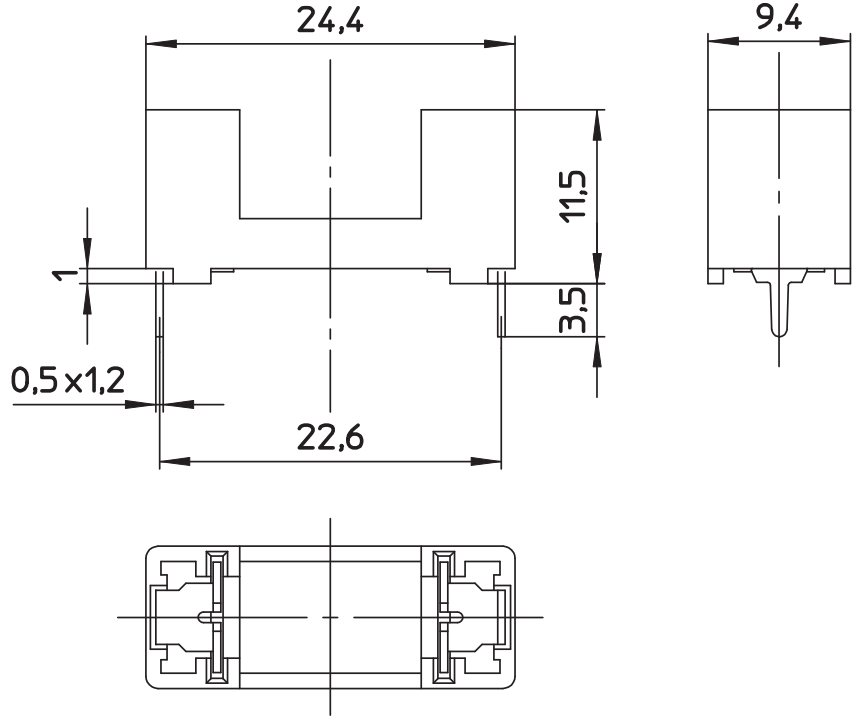

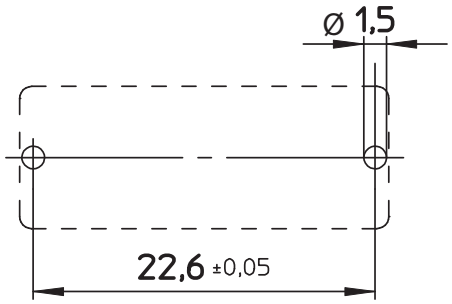

PCB LAYOUT - COMPONENT VIEW

TECHNICAL CHARACTERISTICS

MATERIAL
INSULATOR: PA6/66
FLAMMABILITY RATING: UL94V0
COLOR: GREEN
CONTACT / PLATING: COPPER ALLOY / Ni+Sn

ENVIRONMENTAL
OPERATING TEMPERATURE: -30°C UP TO +120°C
COMPLIANCE: LEAD FREE AND ROHS

ELECTRICAL	UL	VDE
CURRENT RATING:	20A	6,3A
WORKING VOLTAGE:	250VAC	250VAC
WITHSTANDING VOLTAGE:	1,5KV	1,5KV
RATED POWER ACCEPTANCE:	---	1,6W

PROTECTION CLASS: I o II
CONTACT RESISTANCE: 5/10 mΩ MAX

STANDARD
c UL us CERTIFIED: E157417 — CAT. N°: PTF/78
VDE CERTIFIED: 129302 — TYPE: PTF/78

MECHANICAL
FUSE-LINK: 5x20 mm
PROTECTION RATE: IP00
SHOCKSAFE CATEGORY: PC1

SOLDERING
JEDEC LEAD FREE WAVE SOLDERING

PACKAGING
BOX

RoHS Compliant

REV	DATE	FILE	BY
G			
F			
E			
D	14-MAR-17	CURRENT RATING	AK
C	30-JUN-15	SHOCKSAFE	AK
B	01-APR-15	PROTECTION RATE	QL
A	11-SEP-14	PDF	AK

PROJECTION:

APPROVAL: FBr

GENERAL TOLERANCE
±0,1

UNIT: MM
SCALE:
SHEET: 1/2
DRAW: AK

WÜRTH ELEKTRONIK

DESCRIPTION: FUSEHOLDER BLOCKS - PCB - CLIP COVER - THT - WR-FSH

WERI PART NO: 696 108 003 002

SIZE **A4**

Cautions and Warnings:

This electronic component is designed and developed with the intention for use in general electronics equipments.
Before incorporating the components into any equipments in the field such as aerospace, aviation, nuclear control, submarine, transportation, (automotive control, train control, ship control), transportation signal, disaster prevention, medical, public information network etc. where higher safety and reliability are especially required or if there is possibility of direct damage or injury to human body, Wurth Elektronik must be asked for a written approval.
In addition, even electronic component in general electronic equipments, when used in electrical circuits that require high safety, reliability functions or performance, the sufficient reliability evaluation-check for the safety must be performed before by the user before usage.

RoHS Compliant							
G				PROJECTION:	GENERAL TOLERANCE		
F					.X = +/_ 0.2		
E					.XX = +/_ 0.15		
D							
C				APPROVAL: JC	UNIT: MM	DESCRIPTION: DISCLAIMER	SIZE
B					SCALE:		
A	10-SEP-14	PDF	QL		SHEET: 2/2	WERI PART NO: DISCLAIMER	A4
REV	DATE	FILE	BY		DRAW: QL		

WÜRTH ELEKTRONIK