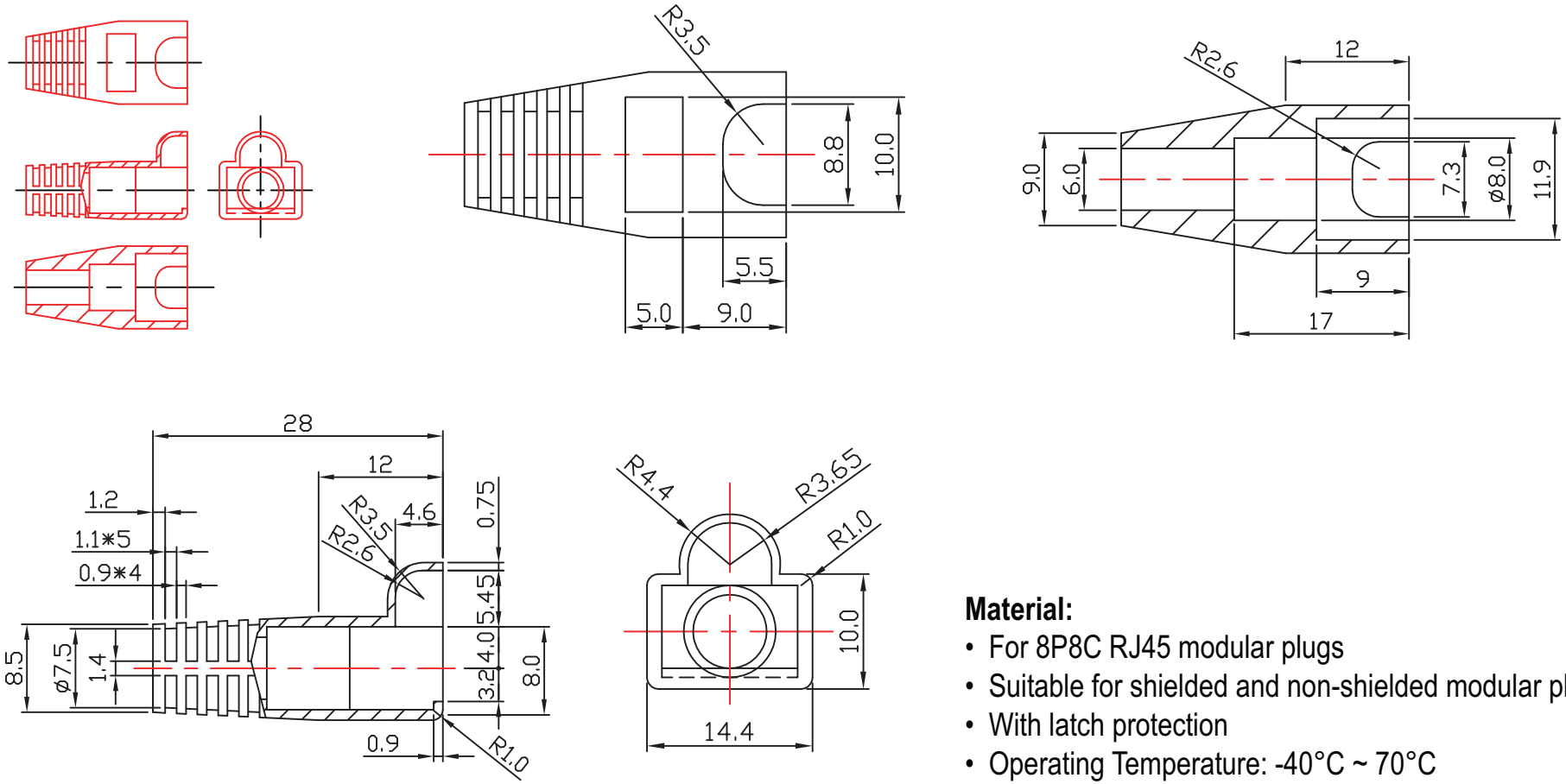

Material:

- For 8P8C RJ45 modular plugs
- Suitable for shielded and non-shielded modular plugs
- With latch protection
- Operating Temperature: -40°C ~ 70°C

***Not for Hirose type**

Unit: MM

Scale	1:1						Name	Item No. **A-MOT/R-8/8-R**
TOLERANCE								
X.X	±0.40				Drawn	11.21.11	Chappell	
X.XX	±0.25				Approved			Title Kink protection boot - RJ45/8P8C modular plugs, Red
X.XXX	±0.15							
Angle	±3°							Drawing No. rev00
			Modification	Date	Name			Replace / Sheet

RoHS Complaint

ASSMANN WSW components