AP2012F3C

AP2012SF4C

Features

- WATER CLEAR LENS AVAILABLE.
- 2.0mmx1.2mm SMT LED, 1.1mm THICKNESS.
- HIGH POWER OUTPUT.
- PACKAGE: 2000PCS/REEL.

Description

F3 Made with Gallium Arsenide Infrared Emitting diodes.

SF4 Made with Gallium Aluminum Arsenide Infrared Emitting diodes.

Package Dimensions

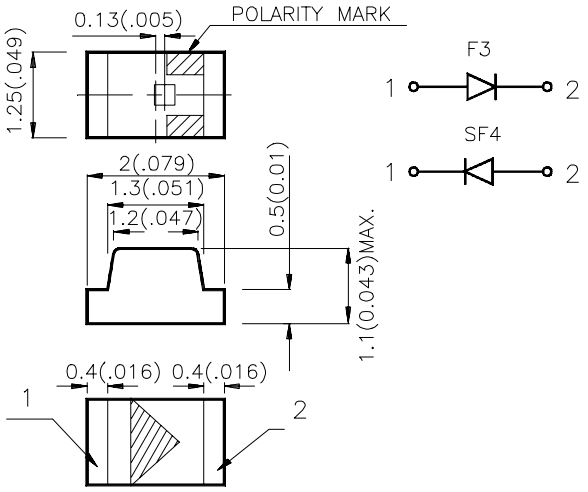

Notes:
1. All dimensions are in millimeters (inches).
2. Tolerance is ±0.1(0.004") unless otherwise noted.
3. Lead spacing is measured where the lead emerge package.
4. Specifications are subject to change without notice.

Selection Guide

Part No.	Dice	Lens Type	Po= (mW/sr) @20mA		Viewing Angle
			Min.	Typ.	2θ1/2
AP2012F3C	GaAs	WATER CLEAR	0.5	1.2	120°
AP2012SF4C	GaAlAs	WATER CLEAR	0.5	1	120°

Note:
1. θ1/2 is the angle from optical centerline where the luminous intensity is 1/2 the optical centerline value.

Electrical / Optical Characteristics at T_A=25°C

Item	P/N	Symbol	Typ.	Max.	Unit	Condition
Forward Voltage	F3 SF4	V_F	1.2 1.3	1.5 1.7	V	IF=20mA
Reverse Current	F3 SF4	I_R	-	10 10	uA	VR=5V
Junction Capacitance	F3 SF4	C	90 90	-	pF	V=0 f=1MHz
Peak Spectral Wavelength	F3 SF4	λP	940 880	-	nm	IF=20mA
Spectral Bandwidth	F3 SF4	Δλ	50 50	-	nm	IF=20mA

Absolute Maximum Ratings at T_A=25°C

Item	Symbol	Maximum Rating	Units
Power Dissipation	P_T	100	mW
Forward Current	I_F	50	mA
Peak Forward Current	i_{FS}	1.2	A
Reverse Voltage	V_R	5	V
Operating Temperature	T_A	-40~ +85	°C
Storage Temperature	T_{STG}	-40~ +85	°C

Note:
1. 1/100 Duty Cycle, 10us Pluse Width.

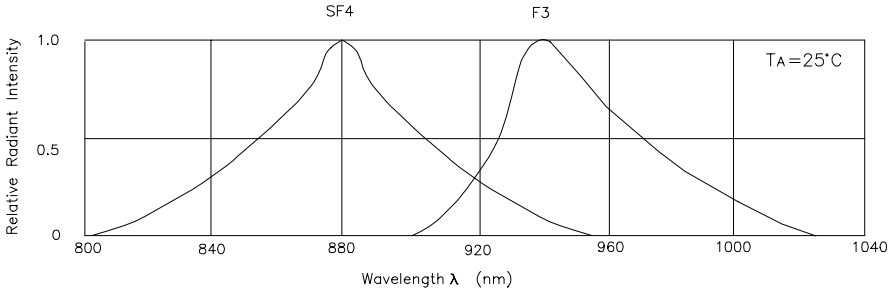

RELATIVE INTENSITY Vs. WAVELENGTH

AP2012F3C

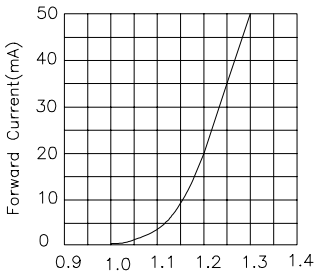

FORWARD CURRENT Vs
FORWARD VOLTAGE

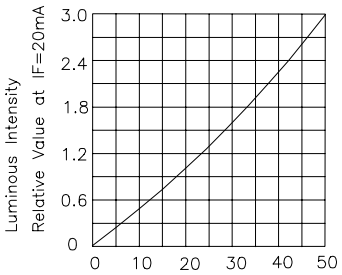

LUMINOUS INTENSITY Vs.
FORWARD CURRENT

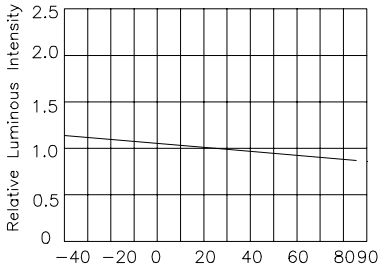

LUMINOUS INTENSITY Vs.
AMBIENT TEMPERATURE

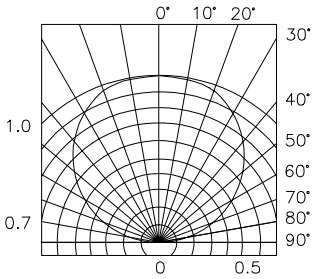

SPATIAL DISTRIBUTION

AP2012SF4C

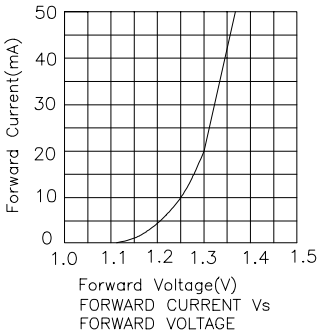

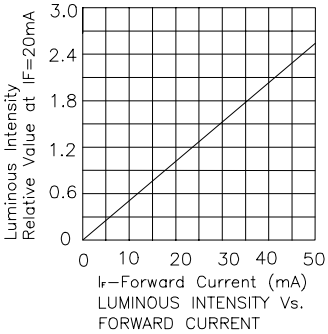

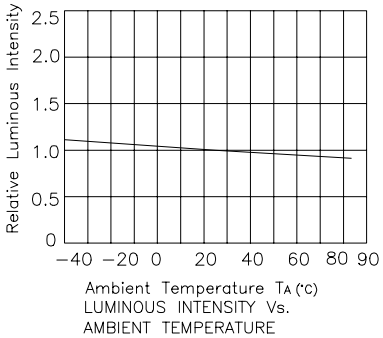

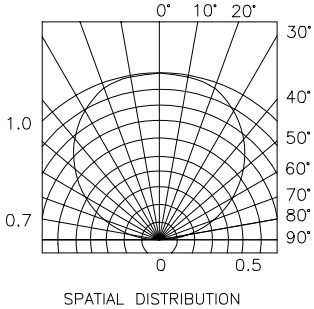

AP2012F3C,AP2012SF4C
SMT Reflow Soldering Instructions

Number of reflow process shall be less than 2 times and cooling process to normal temperature is required between first and second soldering process.

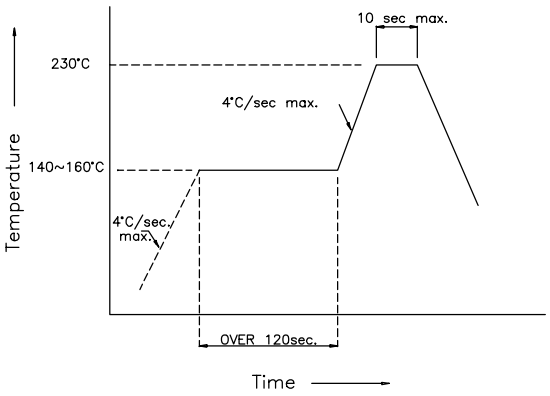

Recommended Soldering Pattern
(Units : mm)

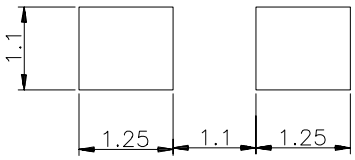

Tape Specifications
(Units : mm)