Rev	AWO #	Description	Date	Appr
-		RELEASED	11/01/10	

APPROVED: _____

DATE: _____ TITLE: _____

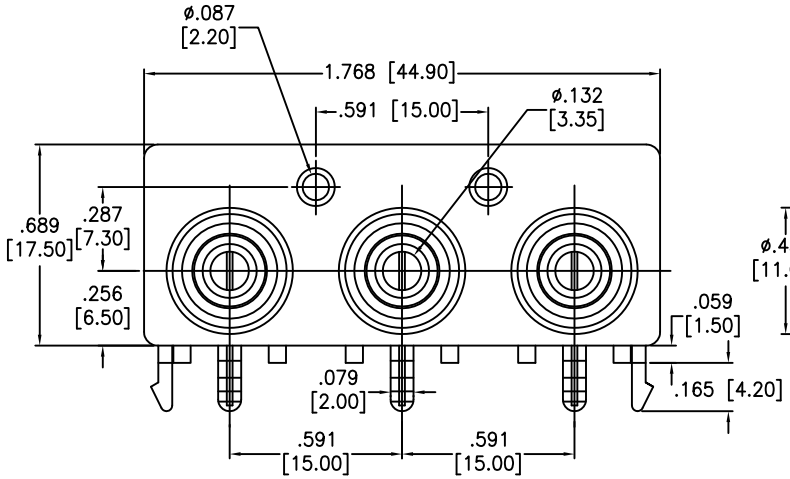

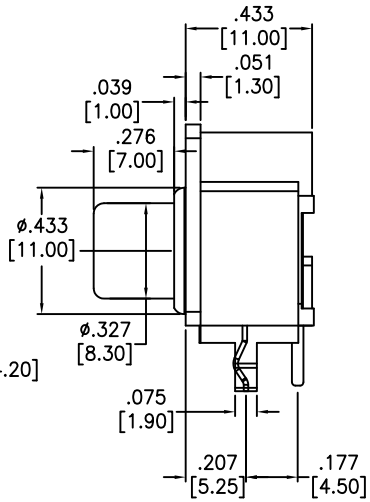

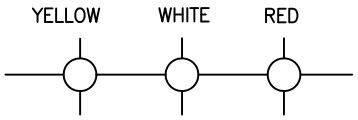

INSERT RING COLORS

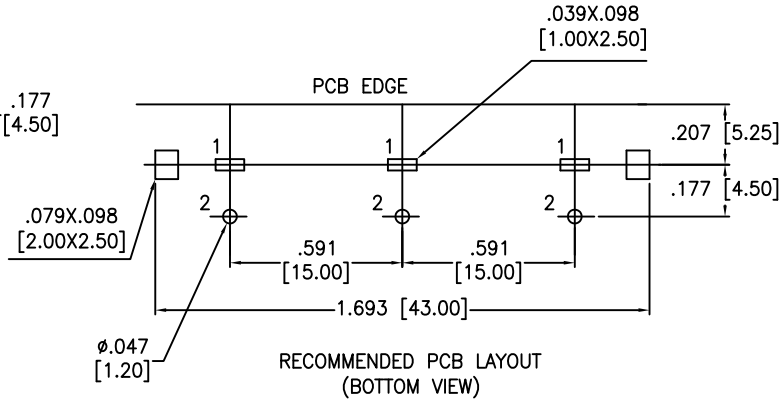

RECOMMENDED PCB LAYOUT
(BOTTOM VIEW)

SCHEMATIC

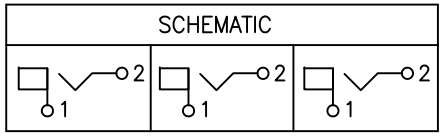

SPECIFICATIONS:

Material:
Housing: PBT, color Black
Ring: PBT, color Yellow, White, Red
Barrel: Brass, Nickel plated
Terminal: Brass, Tin plated
Electrical:
Rated Voltage & Current: DC12V, 2A Max; AC100V, 1A Max.
Contact resistance: 30 mohms max.
Insulation resistance: 100 Mohms min
Dielectric withstanding voltage: 500 VAC for 1 minute
Temperature rating:
Operating temperature: −25˚C to +80˚C
Environmental:
Lead free, RoHS compliant.
Recommended soldering temp: 235˚C for 5 sec.
Packaging:
Anti−ESD plastic bags

RoHS COMPLIANT

UNLESS OTHERWISE SPECIFIED
ALL DIMENSIONS ARE INCHES [MM]
TOLERANCES: EXCEPT AS NOTED

INCHES		HOLES	
.X	± .10	Ø.X	±.10
.XX	± .020	Ø.XX	±.015
.XXX	± .015	Ø.XXX	±.010

APPROVALS		DATE
DRAWN	DY	11/01/10
CHECKED		
APPROVED		

ADAM TECH
909 Rahway Avenue, Union, NJ 07083
Phone: 908-687-5000 Fax: 908-687-5710

TITLE
RCA JACK, 3 PORTS, GANGED

SIZE	PART NO.	REV.
X	RCA-28-Y/W/R	-

REF: S00095T | SCALE: NTS | SHEET 1 OF 1