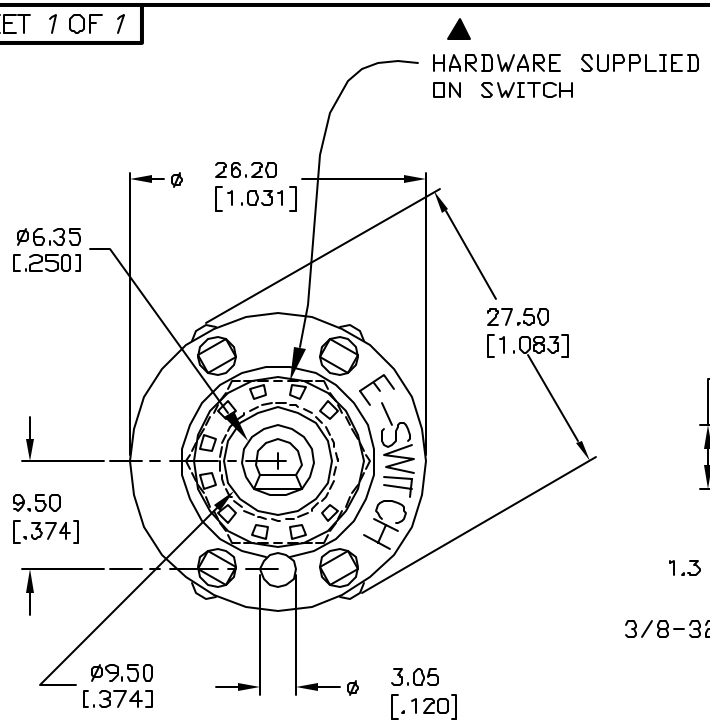

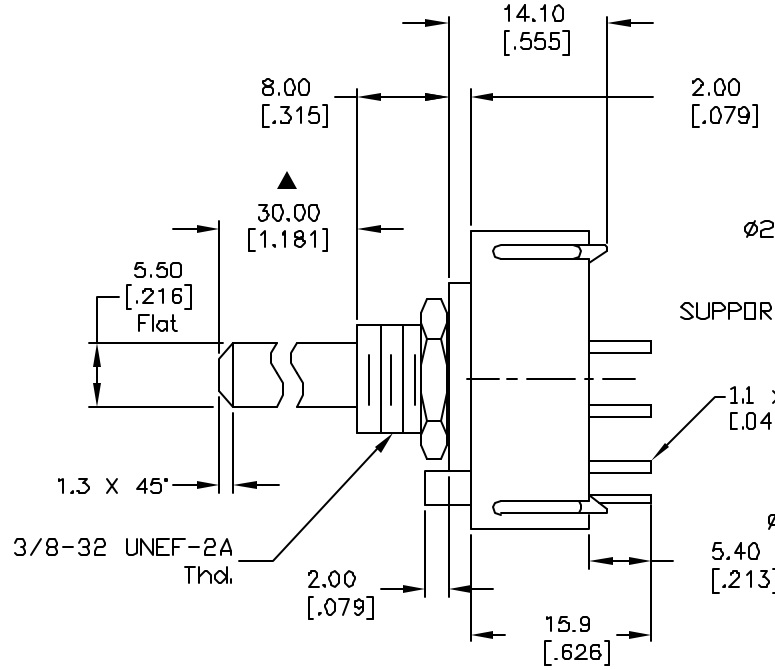

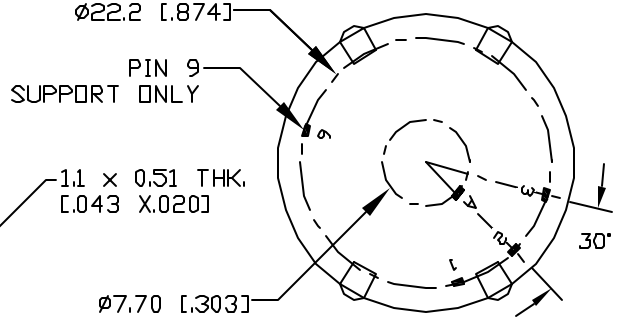

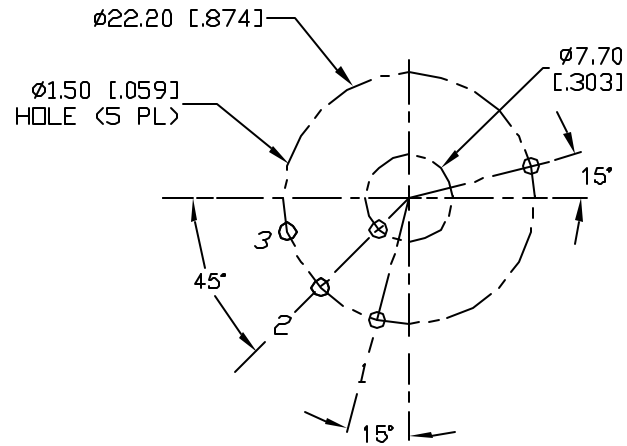

RECOMMENDED P.C.B. LAYOUT

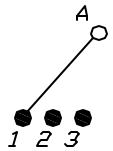

CONTACT CONFIGURATION
Timing: Non-Shorting (BBM)

NOTES:
1. ALL DIMENSION IN MM [INCH]
2. GENERAL TOLERANCE: X.X=±0.4
   X.XX=±0.25
3. TERM. NOS. FOR REF. ONLY
4. CONTACT RATING SWITCHING: 150mA, 250V AC/DC
5. CONTACT MATERIAL: COPPER ALLOW W/SILVER PLATING
6. OPERATING FORCE: 425±100 CM/STANDARD
7. OPERATING TEMP: −30° to 85°C
▲ 8. CIRCUIT SP: 3 POSITIONS, 30° INDEX.
9. DIELECTRIC STRENGTH: 1000V RMS min.@ SEA LEVEL
10. ▲ DENOTES CRITICAL PARAMETER
11. HARDWARE SUPPLIED ON SWITCH— SEE BELOW
    STOP RING, LOCKWASHER, & HEXNUT

REV.	ECN No.	DESCRIPTION	DATE	CHKD
A	13283	RELEASED FOR PRODUCTION	7/11/03	AR

THE INFORMATION CONTAINED IN THIS DOCUMENT IS PROPRIETARY TO E-SWITCH AND IS NOT TO BE COPIED OR TRANSFERRED

E-SWITCH®

TITLE	SCALE	DATE	DR	DWG	REV
KC13A30.001NPS	1.5:1	7/11/03	AR	G527532	A