SHEET OF

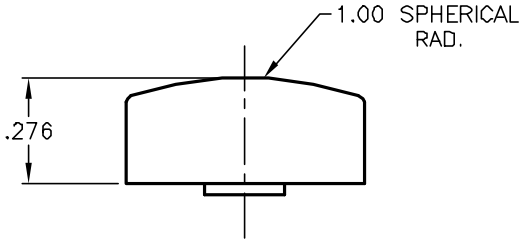

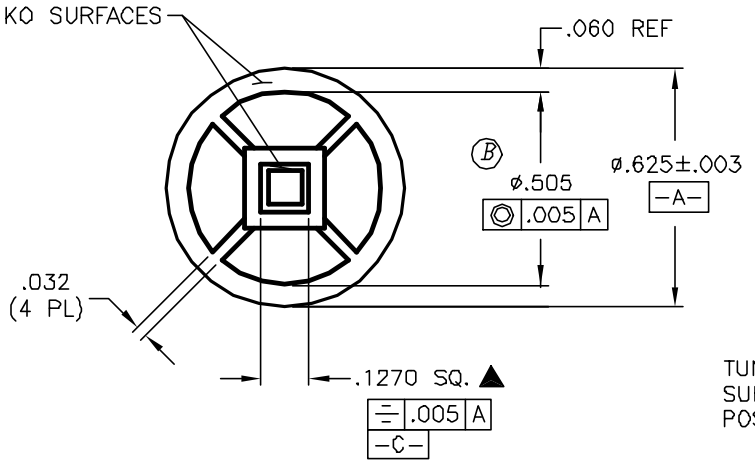

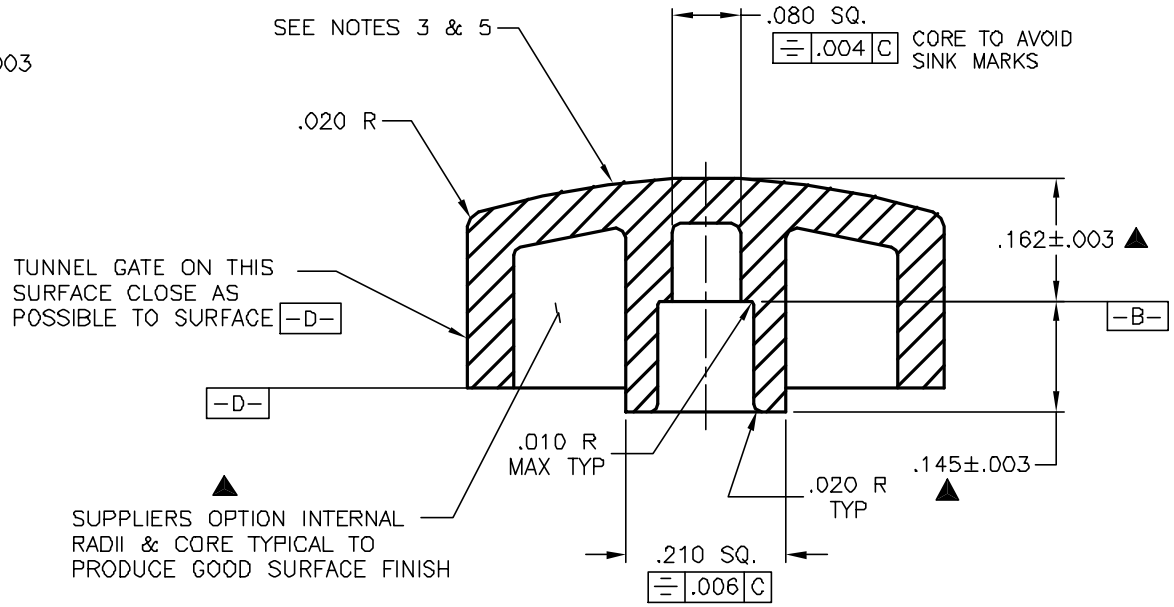

CROSS SECTION
SCALE 4:1

NOTES:

1. ALL DIMENSIONS IN INCHES
2. MATERIAL: ABS RTP600 UL94-V0
3. ▲ SURFACE FINISH: FINE EDM MACHINE FINISH
4. ▲ COLOR: QMPEPETRAG-COLOR CHIP SUPPLIED
5. ▲ EXTERNAL SURFACES TO BE FREE OF SINK MARKS & BLEMISHES
6. ▲ DESIGNATE MAJOR FEATURE:
7. UNLESS OTHERWISE SPECIFIED TOLERANCE TO BE ±.005

REV.	ECN No.	DESCRIPTION	DATE	CHKD
B	11567	REVISED DIMENSION	2/12/02	CB

THE INFORMATION CONTAINED IN THIS DOCUMENT IS PROPRIETARY TO E-SWITCH AND IS NOT TO BE COPIED OR TRANSFERRED

E-SWITCH®

TITLE: 320.09 CAP RED
CAP TO FIT 320.02

SCALE	DATE	DR	DWG	REV
1:1	7/13/01	CB	B099462	B