UF SERIES

(2.54 pitch) solid wire crimp type

UFP-03 Type (Pin Header Connector, Two Row Type)

■ORDERING CODE

UFP—40A—03#2

- #2 = Right angle solder dip
- Terminal type #4 = Straight solder dip
- Connector type 03 = Two rows
- Number of leads
- UF series plugs

● UFP—A—03#2

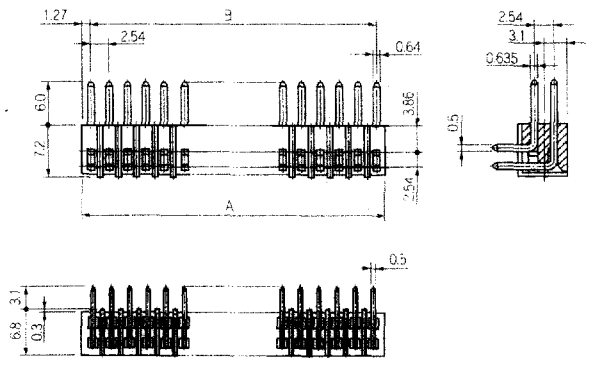

●Recommended PC Board Dimensions (Top View)

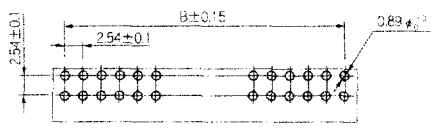

● UFP—A—03#4

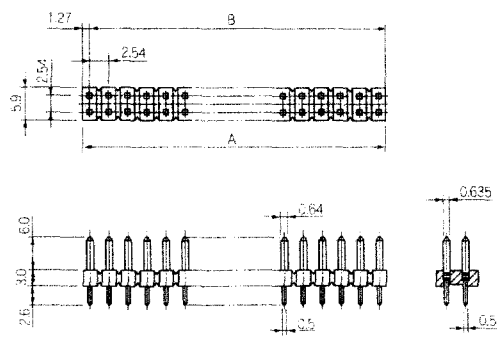

●Recommended PC Board Dimensions (Top View)

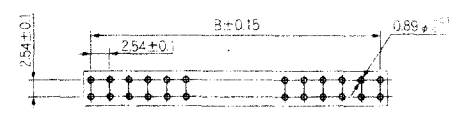

* Applicable sockets : UFS-01 (P.175), UFS-03 (P.176), UFS-04 (P.177)

Part No.	No. of Leads	A	B
UFP—04A—03	4	5.08	2.54
UFP—06A—03	6	7.62	5.08
UFP—08A—03	8	10.16	7.62
UFP—10A—03	10	12.70	10.16
UFP—12A—03	12	15.24	12.70
UFP—14A—03	14	17.78	15.24
UFP—16A—03	16	20.32	17.78
UFP—20A—03	20	25.40	22.86
UFP—22A—03	22	27.94	25.40
UFP—26A—03	26	33.02	30.48
UFP—28A—03	28	35.56	33.02
UFP—30A—03	30	38.10	35.56
UFP—32A—03	32	40.64	38.10
UFP—34A—03	34	43.18	40.64
UFP—38A—03	38	48.26	45.72
UFP—40A—03	40	50.80	48.26
UFP—44A—03	44	55.88	53.34
UFP—48A—03	48	60.96	58.42
UFP—50A—03	50	63.50	60.96
UFP—52A—03	52	66.04	63.50
UFP—60A—03	60	76.20	73.66
UFP—64A—03	64	81.28	78.74
UFP—70A—03	70	88.90	86.36
UFP—74A—03	74	93.98	91.44
UFP—80A—03	80	101.60	99.06

Unit: mm

Notes:

1) 6-, 10-, 12-, 16-, 20-, 26-, 50- and 80-lead right angle connectors (8 types) and 10-,12-, 16-, 20-, 26- and 80-lead straight connectors (6 types) are molded; all others are cut to necessary sizes.

2) 22- and 32- and 48-lead connectors (3 types) are available only in the right angle type.

3) 4-, 34-, 38-, 52-, 70- and 74-lead connectors (6 types) are available only in the straight type.