X O

# VF160/161

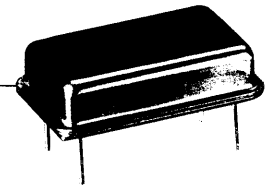

## 10KH ECL/PECL Compatible Clock Oscillator

### FEATURES

- Very Low Phase Jitter
- Industrial Temperature Range
- In–house "Inverted Mesa" Crystal Technology for Higher Frequencies
- Wide Frequency Range
- Low Cost

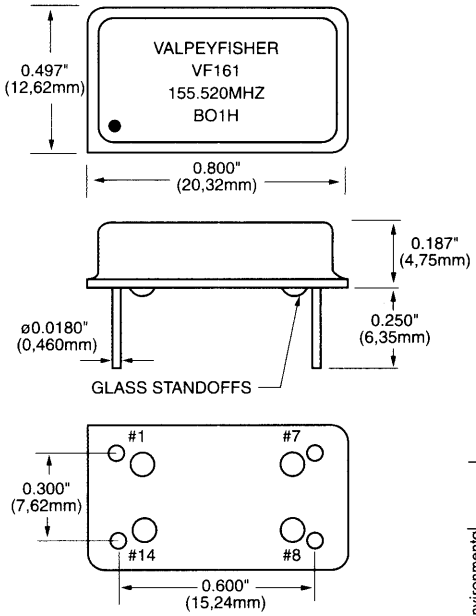


All dimensions are typical unless otherwise specified.

| | Parameter | Symb | Condition | Min | Typ | Max | Unit | Note |
|---|---|---|---|---|---|---|---|---|
| Absolute Max. Ratings | Input Break Down Voltage | Vcc–Vee | | –0.5 | | 7.0 | V | |
| | Storage Temp. | Ts | | –40 | | +85 | °C | |
| Electrical | Frequency Range | F | | 10 | | 300 | MHz | |
| | Frequency Stability | ΔF/F | Overall Conditions Including: Calibration, temp., aging 10 yrs. shock, vibration | | | ±100 | ppm | 1 |
| | Input Voltage | Vcc<br>Vcc<br>Vee | PECL<br>LVPECL<br>ECL | 4.75<br>3.15<br>–4.95 | 5.00<br>3.30<br>–5.20 | 5.25<br>3.45<br>–5.45 | V | VF161<br>VF161L<br>VF160 |
| | Input Current | Icc/Iee | 50 Ohm Load | | | 80 | mA | |
| | Load | 50 Ohm to Vcc–2V or Thevenin Equiv. Bias required | | | | | | |
| | Duty Cycle | | @50% | 45 | 50 | 55 | % | 2 |
| | Rise/Fall Time | Tr/Tf | 20% to 80% | | | 1.5 | ns | |
| | Logic "1" Level | Voh | @Vcc = 5.0V<br>@Vee = –5.2V<br>@Vcc = 3.3V | 4.04<br>–0.96<br>2.59 | | 4.19<br>–0.81<br>2.74 | V | PECL<br>ECL<br>LVPECL |
| | Logic "0" Level | Vol | @Vcc = 5.0V<br>@Vee = –5.2V<br>@Vcc = 3.3V | 3.15<br>–1.85<br>1.45 | | 3.25<br>–1.65<br>1.55 | V | PECL<br>ECL<br>LVPECL |
| | Start–up Time | Ts | | | 2 | 10 | ms | |
| | Phase Jitter | | 1σ | | | 1 | ps | fj>1KHz |

| | | |
|---|---|---|
| Environmental and Mechanical | Operating Temperature Range | 0°C to +70°C (–40°C to +85°C available) |
| | Mechanical Shock | Per MIL–STD–202, Method 213, Cond. E |
| | Thermal Shock | Per MIL–STD–883, Method 1011, Cond. A |
| | Vibration | Per MIL–STD–883, Method 2007, Cond. A |
| | Soldering Conditions | 260°C, for 10s, Max. |
| | Hermetic Seal | Leak rate less than 5 x $10^{-8}$ atm.cc/s of helium |
| Electrical Connections | Pin Out | Pin #1–Complementary Output<br>Pin #7–Ground, Case (PECL)/Vee (ECL)<br>Pin #8–Output<br>Pin #14–Vcc (PECL)/Ground, Case (ECL) |

Notes:
1. Standard frequency stability (±20, ±25, ±50, others available).
2. Tighter duty cycles available. Measure @ 50% of the voltage swing.

All specifications are subject to change without notice.

Creating a Part Number

**VF160/161** [ ][ ][ ] - [ ][ ] - **FREQ.**

| FREQUENCY STABILITY | |
|---|---|
| Code | Specification |
| S | ±20 ppm |
| A | ±25 ppm |
| B | ±50 ppm |
| | ±100 ppm (std.) |

| LEAD CONFIGURATION | |
|---|---|
| Code | Specification |
| G | Gull Wing |
| | Through Hole (std.) |

| OPERATIONAL TEMP. RANGE | |
|---|---|
| Code | Specification |
| | 0°C to +70°C (std.) |
| 1 | -40°C to +85°C |

| DUTY CYCLE | |
|---|---|
| Code | Specification |
| HH | ±2.5% |
| | ±5% (std.) |

| INPUT VOLTAGE | |
|---|---|
| Code | Specification |
| L | 3.3 Volt ±5% (161 only) |
| | 5.0 Volt ±5% (std.) |

Example: VF161SHHL-1-200MHz: Frequency Stability ±20ppm, Duty Cycle ±2.5%, Input Voltage 3.3 Volt ±5%, Operating Temperature -40°C to +85°C, Complementary Output, Frequency 200.000MHz.



ValpeyFisher 75 South Street, Hopkinton, MA 01748 800-982-5737 508-435-6831 Fax: 508-435-5289 www.valpeyfisher.com