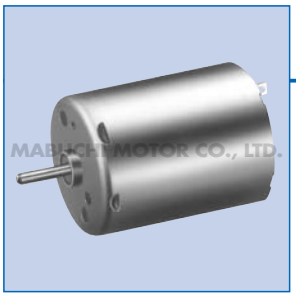

RF-370CA

MABUCHI MOTOR
Precious metal-brush motors

OUTPUT : 0.6W~2.0W (APPROX)

WEIGHT : 51g (APPROX)

Typical Applications **Home Appliances :** Blood Pressure Meter / Kitchen Appliance
Audio and Visual Equipment

MODEL	VOLTAGE		NO LOAD		AT MAXIMUM EFFICIENCY					STALL		
	OPERATING RANGE	NOMINAL	SPEED	CURRENT	SPEED	CURRENT	TORQUE		OUTPUT	TORQUE		CURRENT
			r/min	A	r/min	A	mN·m	g·cm	W	mN·m	g·cm	A
RF-370CA-15370	3~12	12V CONSTANT	5600	0.026	4840	0.17	2.48	25.3	1.25	18.3	187	1.06
RF-370CA-12560	4~12	12V CONSTANT	3700	0.018	3090	0.091	2.03	20.7	0.66	12.3	125	0.46

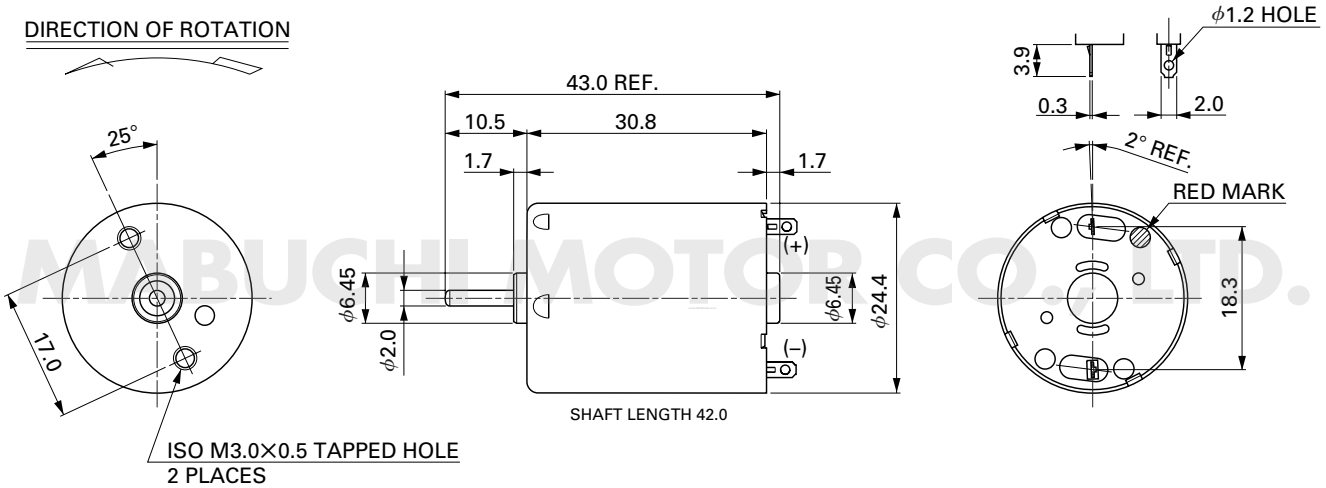

Usable machine screw length 2.0 max. from motor mounting surface.

UNIT: MILLIMETERS

RF-370CA-15370 12.0V

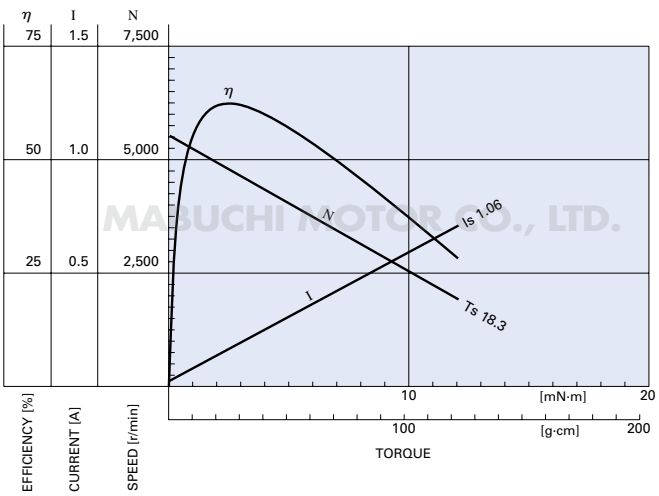

RF-370CA-12560 12.0V

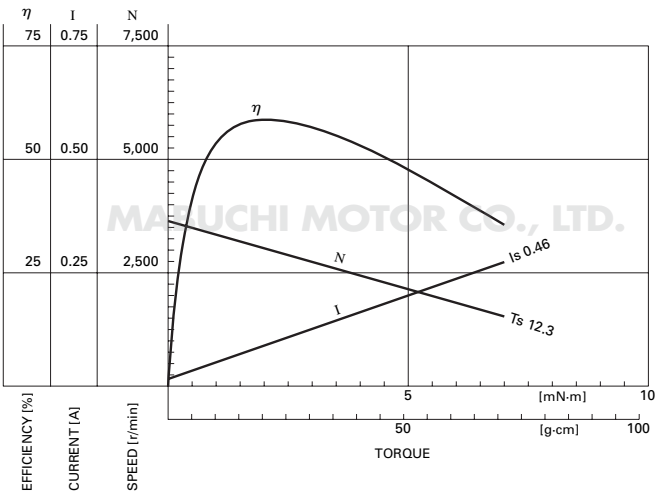

MABUCHI MOTOR CO., LTD. **Headquarters** 430 Matsuhidai, Matsudo City, Chiba, 270-2280 Japan. Tel:81-47-710-1177 Fax:81-47-710-1132 (Sales Dept.)