REVISION A

DO NOT SCALE FROM THIS PRINT

CBSH-XXX-01-X-D-XX

No OF POSITIONS
-030, -050, -060, -090, -120, -150 (PER ROW)

LEAD STYLE
.1280 [3.25]

PLATING SPECIFICATION
-: ELECTRO-PLATED SELECTIVE (USE C-126-01-C)

OPTION
-A: ALIGNMENT PINS (USE BSH-XXX-01-D-A)
-LC: LOCKING CLIPS (USE LC-08-TM-01)

ROW SPECIFICATION
-D: DOUBLE (USE BSH-XXX-01-D)

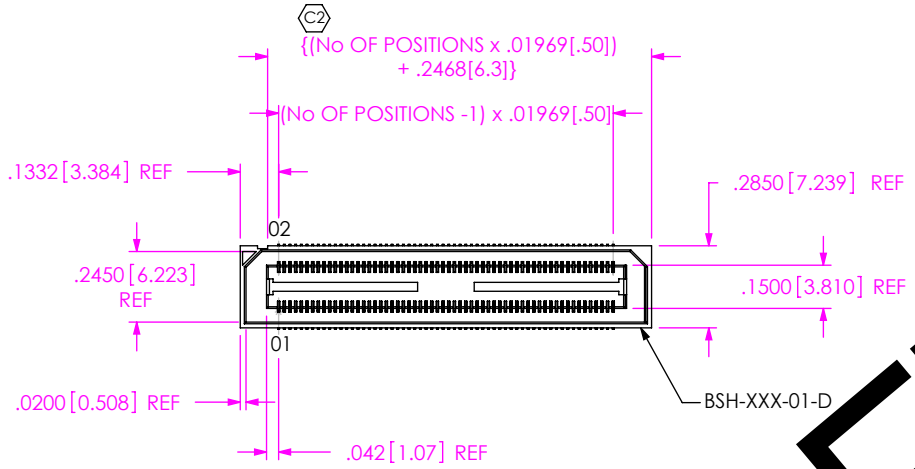

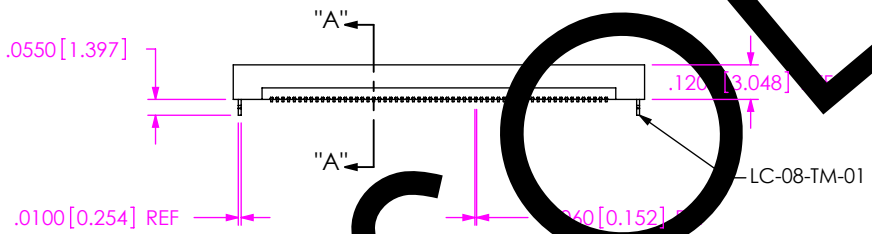

-LC: LOCKING CLIPS OPTION SHOWN

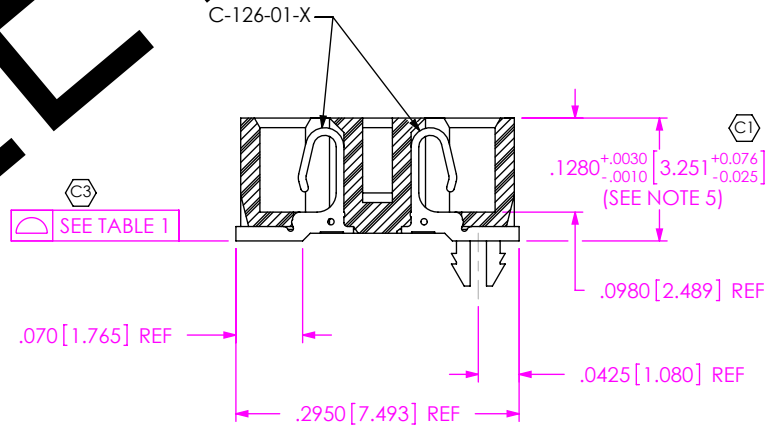

SECTION "A"-"A"
SCALE 5 : 1

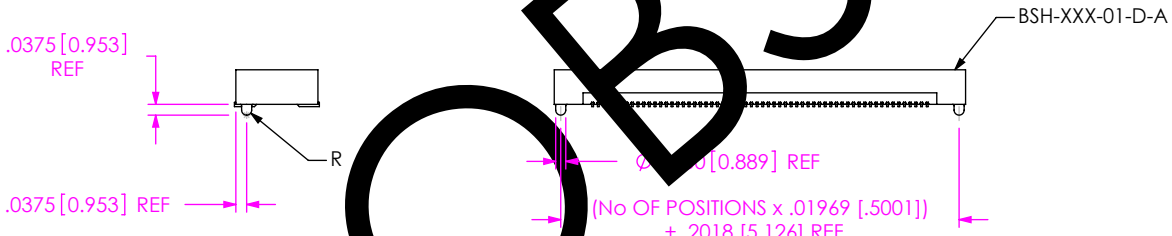

-A: ALIGNMENT PIN OPTION SHOWN

TUBE PACKAGING VIEW
[PARTS TO HAVE POSITION #1 LOADED IN SAME DIRECTION AS ARROW]

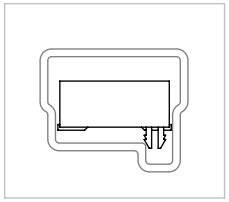

TUBE: PT-1-24-02-78
PLUG: TP-09

TABLE 1	
NO OF POSITIONS	COPLANARITY
-030 THRU -090	.004 [.10]
-120 THRU -180	.006 [.15]

NOTES:

1. Ⓒ REPRESENTS A CRITICAL DIMENSION.
2. BURR ALLOWANCE: .0015 [.038] MAX.
3. MINIMUM PUSHOUT FORCE: 6 OZ.
4. MAXIMUM ALLOWABLE BOW: .002 [.051] INCH/INCH AFTER ASSEMBLY.
5. MAX VARIENCE OF .002 [.051].

UNLESS OTHERWISE SPECIFIED, DIMENSIONS ARE IN INCHES.
TOLERANCES ARE:
DECIMALS .XX: ±.01 [.25] .XXX: ±.005 [.13] .XXXX: ±.0020 [.050]
ANGLES 2°

PROPRIETARY NOTE
THIS DOCUMENT CONTAINS INFORMATION CONFIDENTIAL AND PROPRIETARY TO SAMTEC, INC. AND SHALL NOT BE REPRODUCED OR TRANSFERRED TO OTHER DOCUMENTS OR DISCLOSED TO OTHERS OR USED FOR ANY PURPOSE OTHER THAN THAT WHICH IT WAS OBTAINED WITHOUT THE EXPRESSED WRITTEN CONSENT OF SAMTEC, INC.

samtec
520 PARK EAST BLVD, NEW ALBANY, IN 47150
PHONE: 812-944-6733 FAX: 812-948-5047
e-Mail: info@SAMTEC.com code: 55322

MATERIAL: DO NOT SCALE DRAWING SHEET SCALE: 1.5:1
FLAMMABILITY RATING: UL 94V-O
INSULATOR: BLACK LCP
CONTACT: PHOS BRONZE

F:\DWG\MISC\MKTG\CBSH-XXX-01-X-D-XX-MKT.SLDDRW

DESCRIPTION: .5mm DOUBLE ROW SOCKET ASSEMBLY
DWG. NO. CBSH-XXX-01-X-D-XX
BY: B. PERRY 10/04/2007 SHEET 1 OF 1

OBSOLETE