THIS DRAWING IS UNPUBLISHED. RELEASED FOR PUBLICATION -,- .
© COPYRIGHT - BY TYCO ELECTRONICS CORPORATION. ALL RIGHTS RESERVED.

LOC	DIST
AD	00

REVISIONS

P	LTR	DESCRIPTION	DATE	DWN	APVD
	K	EC 0G3C 0209 05	26APR05	BSV	JLG

1. THE NOTED DIMENSION APPLIES AT THE INTERSECTION OF THE POST AND HOUSING
2. POINT OF MEASUREMENT FOR PLATING THICKNESS.
3. PACKAGED IN SINGLE TUBES
4. POSTS: .000030 GOLD IN CONTACT AREA .000100–.000200 MATTE TIN LEAD ON SOLDER TAIL, ALL OVER .000050 NICKEL
5. POSTS: .000030 GOLD IN CONTACT AREA .000100–.000200 MATTE TIN ON SOLDER TAIL, ALL OVER .000050 NICKEL

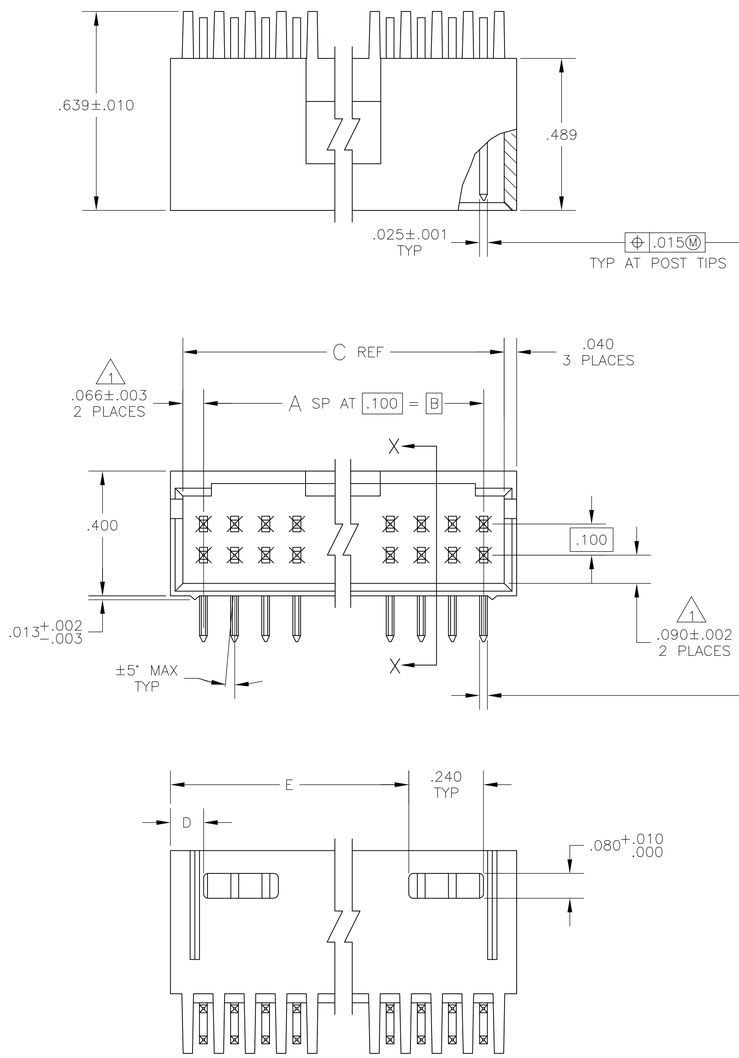

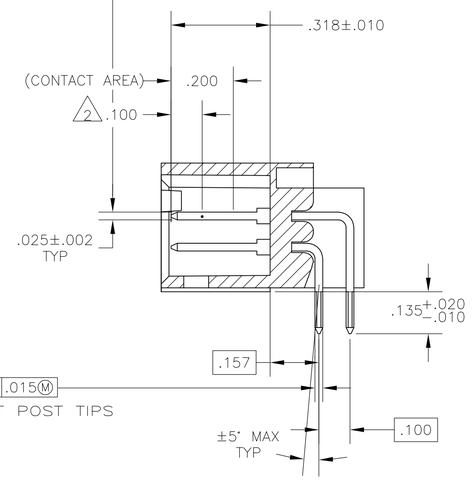

SECTION X–X

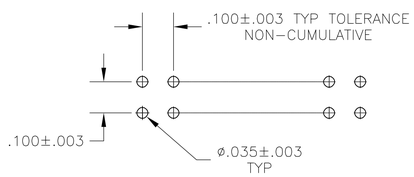

RECOMMENDED HOLE LAYOUT

PLATING	E	D	C	B	A	NO OF POSN	ASSEMBLY PART NUMBER
5	—	.106	.332	.200	2	6	8–103166–6
5	3.506	.106	3.732	3.600	36	74	8–103166–5
5	3.406	.106	3.632	3.500	35	72	8–103166–4
5	3.306	.106	3.532	3.400	34	70	8–103166–3
5	3.206	.106	3.432	3.300	33	68	8–103166–2
5	3.106	.106	3.332	3.200	32	66	8–103166–1
5	3.006	.106	3.232	3.100	31	64	8–103166–0
5	2.906	.106	3.132	3.000	30	62	7–103166–9
5	2.806	.106	3.032	2.900	29	60	7–103166–8
5	2.706	.106	2.932	2.800	28	58	7–103166–7
5	2.606	.106	2.832	2.700	27	56	7–103166–6
5	2.506	.106	2.732	2.600	26	54	7–103166–5
5	2.406	.106	2.632	2.500	25	52	7–103166–4
5	2.306	.106	2.532	2.400	24	50	7–103166–3
5	2.206	.106	2.432	2.300	23	48	7–103166–2
5	2.106	.106	2.332	2.200	22	46	7–103166–1
5	2.006	.106	2.232	2.100	21	44	7–103166–0
5	1.906	.106	2.132	2.000	20	42	6–103166–9
5	1.806	.106	2.032	1.900	19	40	6–103166–8
5	1.706	.106	1.932	1.800	18	38	6–103166–7
5	1.606	.106	1.832	1.700	17	36	6–103166–6
5	1.506	.106	1.732	1.600	16	34	6–103166–5
5	1.406	.106	1.632	1.500	15	32	6–103166–4
5	1.306	.106	1.532	1.400	14	30	6–103166–3
5	1.206	.106	1.432	1.300	13	28	6–103166–2
5	1.106	.106	1.332	1.200	12	26	6–103166–1
5	1.006	.106	1.232	1.100	11	24	6–103166–0
5	.906	.106	1.132	1.000	10	22	5–103166–9
5	.806	.106	1.032	.900	9	20	5–103166–8
5	—	.406	.932	.800	8	18	5–103166–7
5	—	.306	.832	.700	7	16	5–103166–6
5	—	.306	.732	.600	6	14	5–103166–5
5	—	.206	.632	.500	5	12	5–103166–4
5	—	.206	.532	.400	4	10	5–103166–3
5	—	.106	.432	.300	3	8	5–103166–2
5	—	.106	.332	.200	2	6	5–103166–1
4	—	.106	.332	.200	2	6	3–103166–6
4	3.506	.106	3.732	3.600	36	74	3–103166–5
4	3.406	.106	3.632	3.500	35	72	3–103166–4
4	3.306	.106	3.532	3.400	34	70	3–103166–3
4	3.206	.106	3.432	3.300	33	68	3–103166–2
4	3.106	.106	3.332	3.200	32	66	3–103166–1
4	3.006	.106	3.232	3.100	31	64	3–103166–0
4	2.906	.106	3.132	3.000	30	62	2–103166–9
4	2.806	.106	3.032	2.900	29	60	2–103166–8
4	2.706	.106	2.932	2.800	28	58	2–103166–7
4	2.606	.106	2.832	2.700	27	56	2–103166–6
4	2.506	.106	2.732	2.600	26	54	2–103166–5
4	2.406	.106	2.632	2.500	25	52	2–103166–4
4	2.306	.106	2.532	2.400	24	50	2–103166–3
4	2.206	.106	2.432	2.300	23	48	2–103166–2
4	2.106	.106	2.332	2.200	22	46	2–103166–1
4	2.006	.106	2.232	2.100	21	44	2–103166–0
4	1.906	.106	2.132	2.000	20	42	1–103166–9
4	1.806	.106	2.032	1.900	19	40	1–103166–8
4	1.706	.106	1.932	1.800	18	38	1–103166–7
4	1.606	.106	1.832	1.700	17	36	1–103166–6
4	1.506	.106	1.732	1.600	16	34	1–103166–5
4	1.406	.106	1.632	1.500	15	32	1–103166–4
4	1.306	.106	1.532	1.400	14	30	1–103166–3
4	1.206	.106	1.432	1.300	13	28	1–103166–2
4	1.106	.106	1.332	1.200	12	26	1–103166–1
4	1.006	.106	1.232	1.100	11	24	1–103166–0
4	.906	.106	1.132	1.000	10	22	103166–9
4	.806	.106	1.032	.900	9	20	103166–8
4	—	.406	.932	.800	8	18	103166–7
4	—	.306	.832	.700	7	16	103166–6
4	—	.306	.732	.600	6	14	103166–5
4	—	.206	.632	.500	5	12	103166–4
4	—	.206	.532	.400	4	10	103166–3
4	—	.106	.432	.300	3	8	103166–2
4	—	.106	.332	.200	2	6	103166–1

THIS DRAWING IS A CONTROLLED DOCUMENT.

DIMENSIONS: INCHES

TOLERANCES UNLESS OTHERWISE SPECIFIED:
0 PLC ± –
1 PLC ± –
2 PLC ± –
3 PLC ± .005
4 PLC ± –
ANGLES ± –

MATERIAL: HOUSING: FLAME RETARDANT THERMOPLASTIC COLOR : BLACK
POST:PHOS BRONZE

FINISH: SEE TABLE

DWN H MOLL 27JUL87
CHK R FEIDT 28JUL87
APVD R FLICKER 29JUL87
PRODUCT SPEC —
APPLICATION SPEC —
WEIGHT —

Tyco Electronics Corporation
Harrisburg, Pa 17105–3608

NAME: HDR ASSY, MOD II, SHROUDED, 4 SIDES, DBL ROW, .100X.100 RIGHT ANGLE, W/ .025 SQ POSTS

SIZE A1 | CAGE CODE 00779 | DRAWING NO C–103166 | RESTRICTED TO —

CUSTOMER DRAWING | SCALE 4:1 | SHEET 1 OF 1 | REV K