REVISION A

NOTES:
1. c.xx.xx.xx REPRESENTS A CRITICAL DIMENSION.
2. ALL DIMENSIONS TO BE SYMMETRICAL ABOUT CENTERLINE WITHIN Ñ.002[.05] UNLESS OTHERWISE NOTED.
3. PARTS ARE TO BE 100% ELECTRICALLY TESTED FOR CONTINUITY, OPENS/SHORTS.
4. GERBER DATABASE TO TAKE PRECEDENCE OVER THIS DRAWING.
5. PARTS TO BE BUILT/INSPECTED TO IPC 610 & 6013 CLASS 2.
6. PARTS TO BE RoHS COMPLIENT.

THIS PRODUCT MANUFACTURED WITH LEAD-FREE PROCESSING

DO NOT SCALE FROM THIS PRINT

RFDL2-XX-XXXXX-XXXXX-XX.XX-X

No OF POSITIONS
-03

END OPTION 1
-01SJ1: STRAIGHT JACK
-01SP1: STRAIGHT PLUG

END OPTION 2
-01EJ1: EDGE JACK
-01EP1: EDGE PLUG

LENGTH (IN INCHES)
-05.00: 5.00[127.0] INCHES
-10.00: 10.00[254.0] INCHES

-B: BREAK OUT

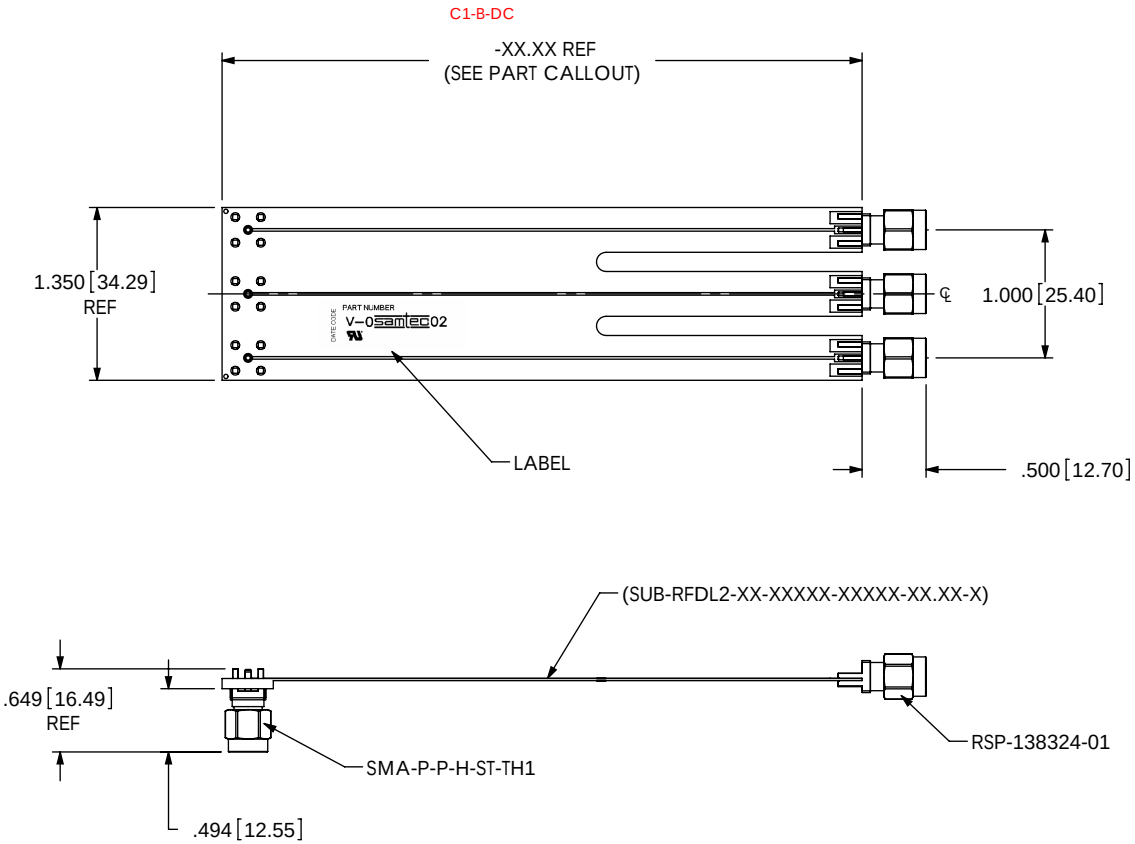

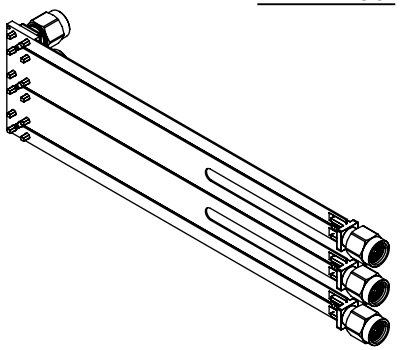

FIG.1
(RFDL2-03-01SP1-01EP1-XX.XX-B SHOWN)

TABLE 1	
FE PART #	ASSEMBLY PART #
FE-10624-FA1	RFDL2-03-XXXXX-XXXXX-05-B
FE-10625-FA1	RFDL2-03-XXXXX-XXXXX-10-B

☐ ACCEPTANCE OF DRAWING
☐ ACCEPTED WITH DEVIATIONS LISTED

DATE:
COMPANY:
CUSTOMER SIGNATURE
PRINTED NAME
PHONE No:
FAX No:

TOLERANCES DO NOT APPLY TO REFERENCE DIMENSIONS.
UNLESS OTHERWISE SPECIFIED, DIMENSIONS ARE IN INCHES.
TOLERANCES ARE:

DECIMALS	ANGLES
.XX: ±.01[.3]	2°
.XXX: ±.005[.13]	
.XXXX: ±.0020[.051]	

PROPRIETARY NOTE
THIS DOCUMENT CONTAINS INFORMATION CONFIDENTIAL AND PROPRIETARY TO SAMTEC, INC. AND SHALL NOT BE REPRODUCED OR TRANSFERRED TO OTHER DOCUMENTS OR DISCLOSED TO OTHERS OR USED FOR ANY PURPOSE OTHER THAN THAT WHICH IT WAS OBTAINED WITHOUT THE EXPRESSED WRITTEN CONSENT OF SAMTEC, INC.

samtec
520 PARK EAST BLVD, NEW ALBANY, IN 47150
PHONE: 812-944-6733 FAX: 812-948-5047
e-Mail: info@SAMTEC.com code: 55322

DO NOT SCALE DRAWING SHEET SCALE: 1:1

DESCRIPTION: RF FLEX CIRCUIT ASSEMBLY

DWG. NO. RFDL2-XX-XXXXX-XXXXX-XX.XX-X

BY: D. SCHMELZ 6/03/2008 SHEET 1 OF 2

F:\DWG\MISC\Mktg\RFDL2-XX-XXXXX-XXXXX-XX.XX-X.SLDDRW

RFDL2-XX-XXXXX-XXXXX-XX.XX-X

REVISION A

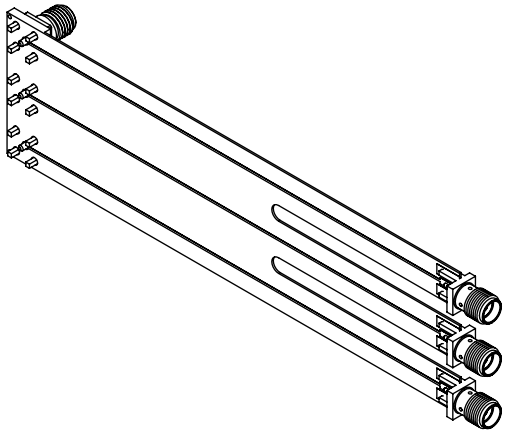

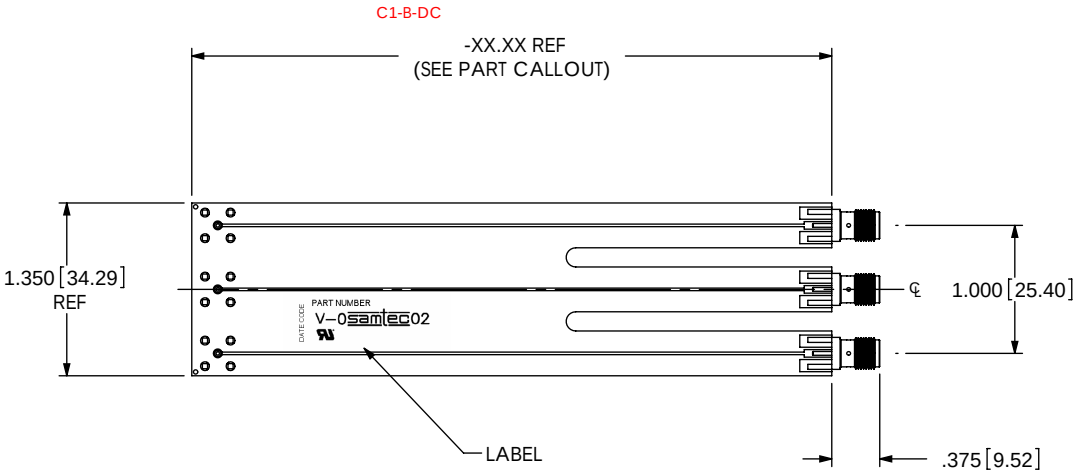

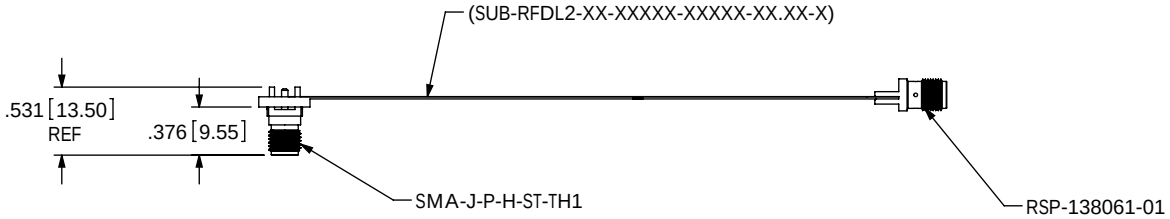

FIG.2
(RFDL2-03-01SJ1-01EJ1-XX.XX-B SHOWN)

PROPRIETARY NOTE
THIS DOCUMENT CONTAINS INFORMATION CONFIDENTIAL AND PROPRIETARY TO SAMTEC, INC. AND SHALL NOT BE REPRODUCED OR TRANSFERRED TO OTHER DOCUMENTS OR DISCLOSED TO OTHERS OR USED FOR ANY PURPOSE OTHER THAN THAT WHICH IT WAS OBTAINED WITHOUT THE EXPRESSED WRITTEN CONSENT OF SAMTEC, INC.

520 PARK EAST BLVD, NEW ALBANY, IN 47150
PHONE: 812-944-6733 FAX: 812-948-5047
e-Mail: info@SAMTEC.com code: 55322

DO NOT SCALE DRAWING

SHEET SCALE: 1:1

DESCRIPTION:
CUSTOM HDR CABLE ASSEMBLY

DWG. NO.
RFDL2-XX-XXXXX-XXXXX-XX.XX-X

BY: D. SCHMELZ 6/03/2008 SHEET 2 OF 2

F:\DWG\MISC\Mktg\RFDL2-XX-XXXXX-XXXXX-XX.XX-X.SLDDRW