SINGLE ROW (1 YO)

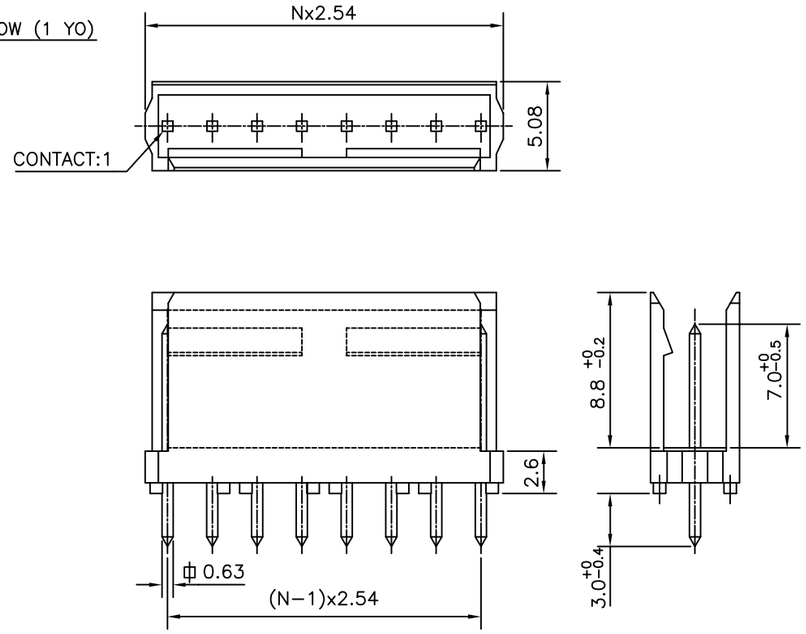

PCB DRILLING DETAILS

DOUBLE ROW (2 YO)

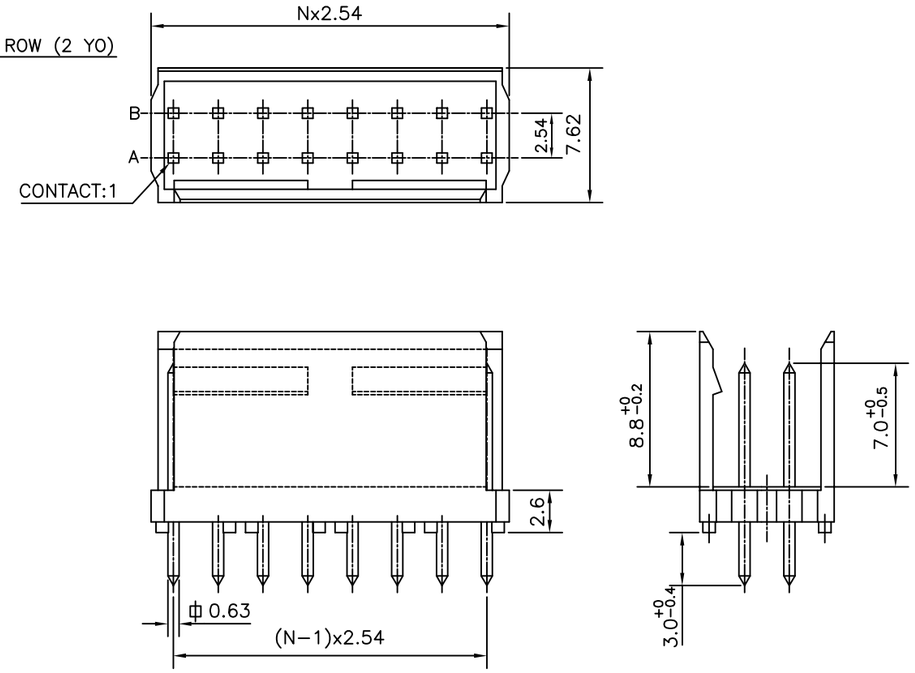

PCB DRILLING DETAILS

ORDERING INFORMATION

8614 − 20 − XX − X − XX− X − XX

LF :−LEAD FREE

8614 SERIES

20− SHROUDED MALE

NO.OF CONTACTS
2 TO 25,4 TO 50

NO.OF ROWS
1 − SINGLE ROW
2 − DUAL ROW

YO − STRAIGHT SOLDER

PLATING
1 − TIN LEAD
2 − 0.2 μAu
3 − 0.75 μ Au SELECTIVE
4 − 0.2 μ Au SELECTIVE
5 − 1.27μ Au SELECTIVE
6 − 0.75μ Au
7 − GOLD FLASH SELECTIVE
8 − 1.27μ Au SELECTIVE
9 − 0.4μ FULL GOLD
10 − FULL GOLD FLASH (NOTE−2)
11 − 0.75 μ Au(w/o Ni undercoat)
12 − 1.27 μ Au + Au.Flash (NOTE−2)
13 − 0.75 μ Au +Au.Flash (NOTE−2)
14 − 0.25 μ Au. SELECTIVE
15 − 0.25 μ Au+Au.Flash (NOTE−2)

TECHNICAL SPECIFICATION

INSULATOR MATERIAL	: SELF EXTINGUISHING THERMOPLASTIC (UL94 V0)
CONTACT MATERIAL	: COPPER ALLOY
MAXIMUM VOLTAGE	: 1000 V rms.
NOMINAL CURRENT	: 3A AT 20°C
INSULATION RESISTANCE	: ⩾ 5000 MΩ
CONTACT RESISTANCE	: ⩽ 20 mΩ
CLIMATIC CATAGORY	: −55°C TO +125°C / 21 DAYS EXPOSURE TO− INDUSTRIAL ENVIRONMENT HUMIDITY TEST AS HE−14.

NOTES :
1. THE PRODUCT (LF) MEETS EUROPEAN UNION DIRECTIVES AND OTHER COUNTRY REGULATIONS AS DESCRIBED IN GS−22−008
2. SHELF LIFE : SIX MONTHS FROM DATE OF MANUFACTURING

ltr	ecn no	dr	date
B	I06-0125	MKV	2003-06-20
C	I06-0116	AB	2006-07-20
D	I08-0006	MINI	2008-01-17

mat'l. code REF TECH SPEC
surface ISO 1302
tolerance ISO 406 ISO 1101
tolerances unless otherwise specified
angles 0°±1°
linear .0±0.1
projection
MM
scale −

dr	MINI K VANDANATH	1998-12-06
engr	JAI.K.A	1998-12-06
chr	ALEX BABU	2008-01-17
appd	BIJU K P	2008-01-17

sheet index | revision D | sheet 1

product family 8614

title SHROUDED MALE CONNECTOR (STRAIGHT SOLDER)

dwg no C-8614-0081 sheet 1 of 1 size A3

type Product Customer Drawing

FCIconnect.com
Copyright FCI

PDM: Rev:D STATUS:Released Printed: Jan 29, 2008