PRODUCT NUMBER

57202–XXX–XXXXXLF

PLATING
S = 0.38µm GOLD/GXT ON CONTACT AREA
3.81µm TIN LEAD ON TAIL

G = 0.76µm GOLD/GXT ON CONTACT AREA
3.81µm TIN LEAD ON TAIL

F = GOLD FLASH ON CONTACT AREA
3.81µm TIN LEAD ON TAIL

WHEN "LF" IS REQUIRED, 2µm MIN MATTE TIN OVER 1.27µm MIN NICKEL INSTEAD OF TIN–LEAD

WHEN REQUIRED, ADD SUFFIX LETTER "LF" INDICATES THE PRODUCT IS RoHS COMPATIBLE SEE NOTE 7

POLARIZATION, SEE NOTE 6

PACKAGING, SEE NOTE 5

NB OF POS PER ROW : 02 TO 25

STYLE	POST LENGTH ±0.2
51	2.00
52	4.00
53	3.50

TOP VIEW

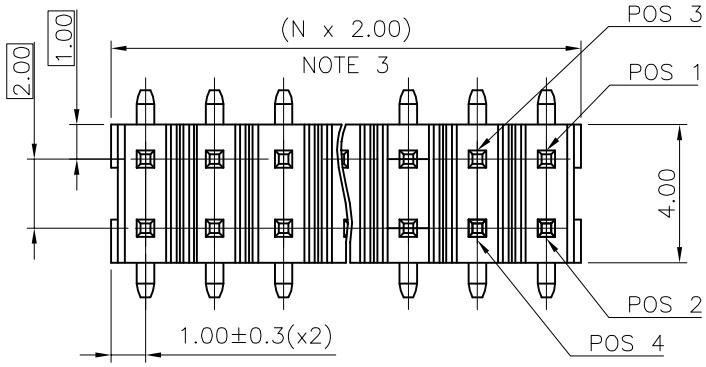

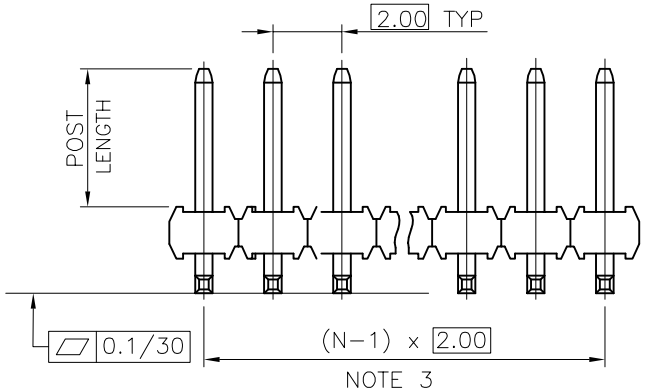

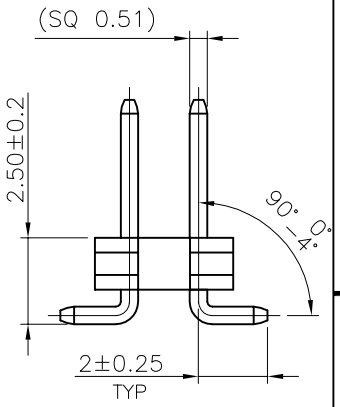

NOTES:

1. MATERIAL HOUSING: HIGH TEMP. THERMOPLASTIC UL 94V–0, COLOR BLACK
2. MATERIAL TERMINAL: COPPER ALLOY
3. TO DETERMINE DIMENSIONS:
   N = NUMBER OF POSITIONS PER ROW.
4. 7N MIN. PIN RETENTION IN EITHER DIRECTION.
5. PACKAGING:
   = PLASTIC BOX.
   – = PLASTIC BOX WHEN POLARISATION FEATURE APPLICABLE.
   U = TUBE AVAILABLE FROM 04 TO 25 POS PER ROW.
   A = TAPE AND REEL WITH PICK UP CAP INSTALLED IN THE CENTER OF THE PRODUCT FOR PICK AND PLACE SEE TA 884 FOR PRODUCT AVAILABILITY.
   K = TAPE AND REEL WITHOUT CAP, SEE TA884 FOR AVAILABILITY.
6. FOR POLARIZATION, SPECIFY POSITION NUMBER TO OMIT PIN.
   EXAMPLE : 03 = OMIT PIN POSITION 3, SEE TOP VIEW.
   OMIT FROM PRODUCT NUMBER IF THIS FEATURE IS NOT APPLICABLE.
7. RoHS COMPATIBLE PRODUCT SPECIFICATIONS
   a – PLATING:
   – "LF" MEANS THE PRODUCT IS LEAD–FREE, 2µm MINIMUM MATTE TIN OVER 1.27µm MINIMUM NICKEL UNDERPLATE.
   b – MANUFACTURING PROCESS COMPATIBILITY
   – THE HOUSING WILL WITHSTAND EXPOSURE TO 260°C PEAK TEMPERATURE FOR 30 SECONDES IN A CONVECTION, INFRA–RED OR VAPOR PHASE REFLOW OVEN.
   c – LABELLING:
   – MEETS PACKAGING SPECS AS PER GS–14–920
   d – LEGAL STATEMENT : SEE GS–22–008

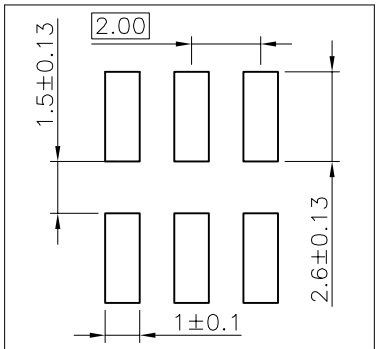

RECOMMENDED PAD LAYOUT

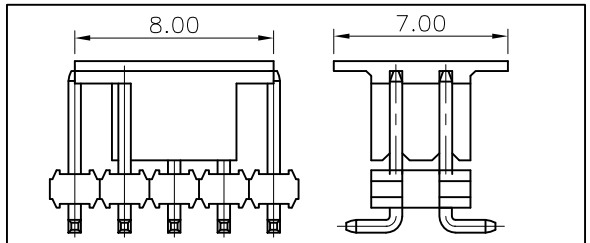

CAP DIMS FOR 2x3 POS UP TO 2x25 POS

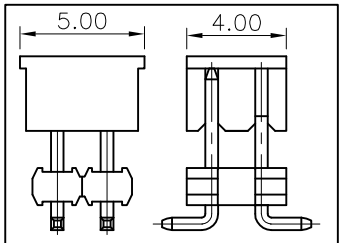

CAP DIMS FOR 2x2 POS

ltr	ecn no	dr	date
L	F09–0087	JCO	09.09.04
F	F04–0378	LMU	04.11.26
G	F05–0124	LMU	05.02.07
H	F06–0210	LMU	06.07.04
J	F06–0327	LMU	07.01.03
K	F08–0145	ELA	17.04.08

mat'l. code

surface ISO 1302 ✓ tolerance ISO 406 ISO 1101

tolerances unless otherwise specified: angles; linear .X ±0.3, .XX ±0.13, .XXX ±0.05

projection ⊕ mm scale 1:1

dr	L.MULIN	04.05.06
engr	J.COMPAGNON	0.4.11.25
chr		
appd	JM.C	04.11.25

sheet index | revision sheet

product family: MINITEK

title: UNSH HEADER 2.00 mm VERTICAL SMT

dwg no: 57202 | sheet 1 of 1 | size A3

type: CUSTOMER Drawing

form: A3

FCIconnect.com
Copyright FCI
Printed: Sep 22, 2009
STATUS: Released
PDM: Rev:L