DATE	SYM	REVISION RECORD	AUTH.	DR.	CK.
6/24/98	–	ISSUED		NT	MM

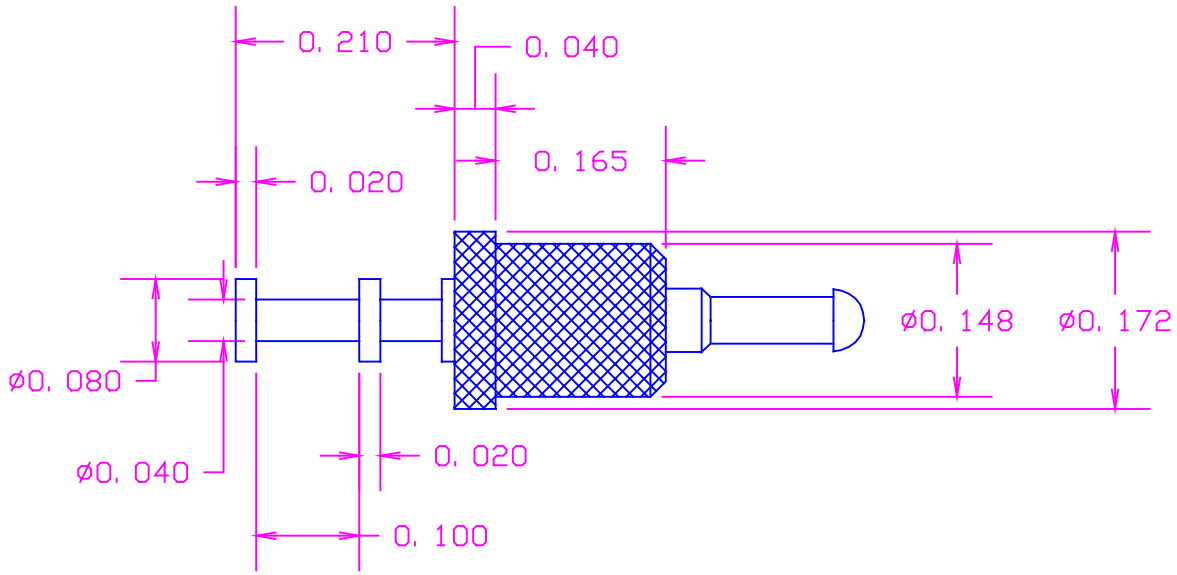

RECOMMENDED HOLE SIZE
FOR PRESS FIT INSERTION

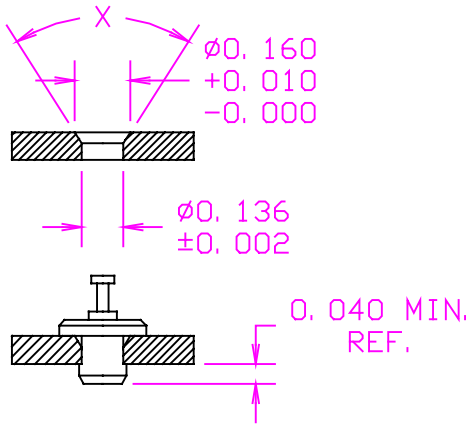

FOR BOARD THICKNESS GREATER THAN .040, X=60°
FOR BOARD THICKNESS LESS THAN .040, X=80°

MATERIAL: PIN– BRASS PER ASTM B16,
ALLOY C 36000, 1/2 HARD
BUSHING– PTFE PER ASTM D1710
COLOR(XX)– SEE COLOR CODE
FINISH: PIN– .0003"MIN. ELECTRO–SOLDER PER
MIL–P–81728, OVER .0001"MIN. COPPER

(XX)COLOR CODE:
10-BLACK
11-BROWN
12-RED
13-ORANGE
14-YELLOW
15-GREEN
16-BLUE
17-VIOLET
18-GRAY
19-WHITE(NATURAL)

ACTUAL SIZE

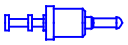

TOLERANCES	CONCORD ELECTRONICS CORPORATION		
DECIMAL ± .010	P/N	SCALE	30 GREAT JONES ST. NEW YORK N.Y. 10012
FRACTIONAL ± 1/64	TITLE TERMINAL		
± 5°	DATE 6–24–98	DRAWING NUMBER 1111–14S–05XX	