.075 SERIES 3 ROW STRAIGHT PLUG / RECEPTACLE AND RIGHT ANGLE RECEPTACLE

Dimensions					
No. of Cnt's	"A"	"B"	"C"	"D"	"E"
080	2.730	2.560	2.200	1.950	2.390
122	3.780	3.610	3.250	3.000	3.440
152	4.530	4.360	4.000	3.750	4.190
206	5.880	5.710	5.350	5.100	5.540

P/N AXX XXX AXXX AXXX AXX

- Body Style
- Number of Contacts
- Contact Code see page A12
- Hardware Code see page A7-A8
- Variation see page A20

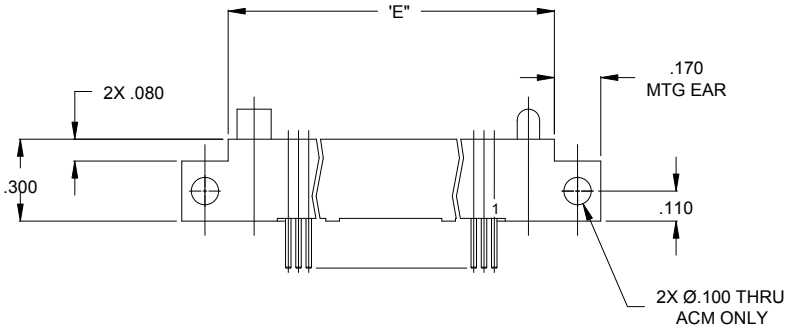

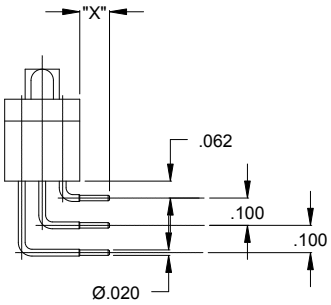

ACP
CARD EXTENDER

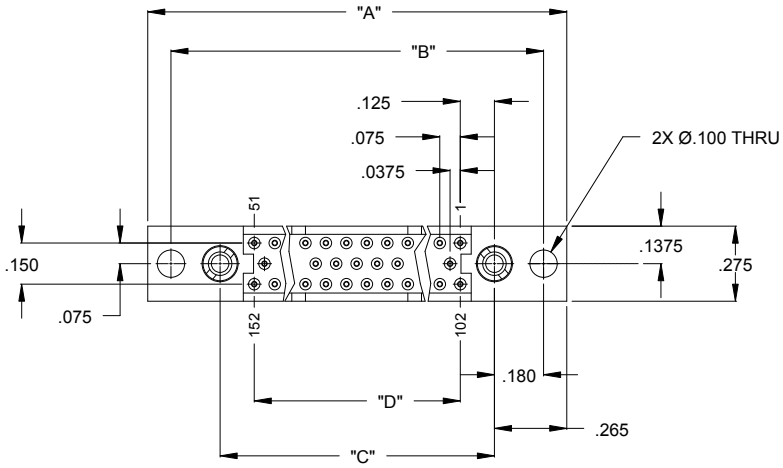

MATING CONNECTORS:

RECEPTACLE	AAA - AS SHOWN WITH MTG EARS ACA - WITHOUT MTG EARS	AAC, ACC AAB, ACB
PLUG	AAC - WITH MTG EARS ACC - WITHOUT MTG EARS	AAA, ACA ACP, ABM
RIGHT ANGLE RECEPTACLE	ACP - WITH RIGHT MTG EARS ACM - WITH RIGHT MTG HOLES	AAC, ACC AAB, ACB

INCON Inc.

5 Flagstone Drive Hudson, New Hampshire 03051
Phone 603-595-0550 Fax 603-595-0555 Email: techsupport@inconconnector.com
Web Address: www.InconConnector.com