DRAWING MADE IN THIRD ANGLE PROJECTION
THIS DRAWING IS UNPUBLISHED. RELEASED FOR PUBLICATION .19 .
© COPYRIGHT 19 BY AMP INCORPORATED. ALL INTERNATIONAL RIGHTS RESERVED.

LOC	DIST	P	F
AD	00		

REVISIONS

ZONE	LTR	DESCRIPTION	DATE	APPD
	W	REV PER 0G3C-0515-04	05JAN05	JR/MM

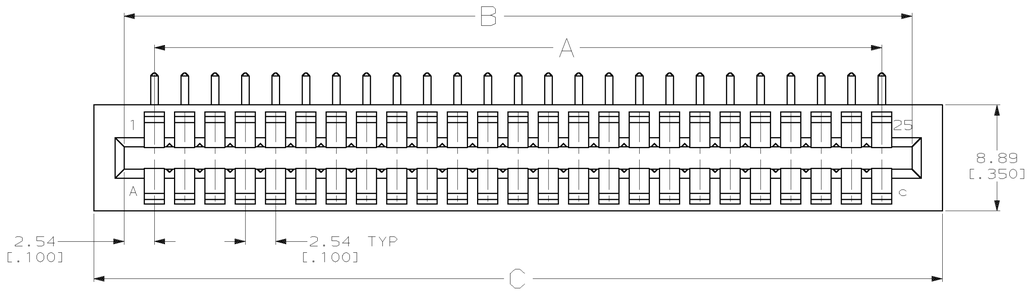

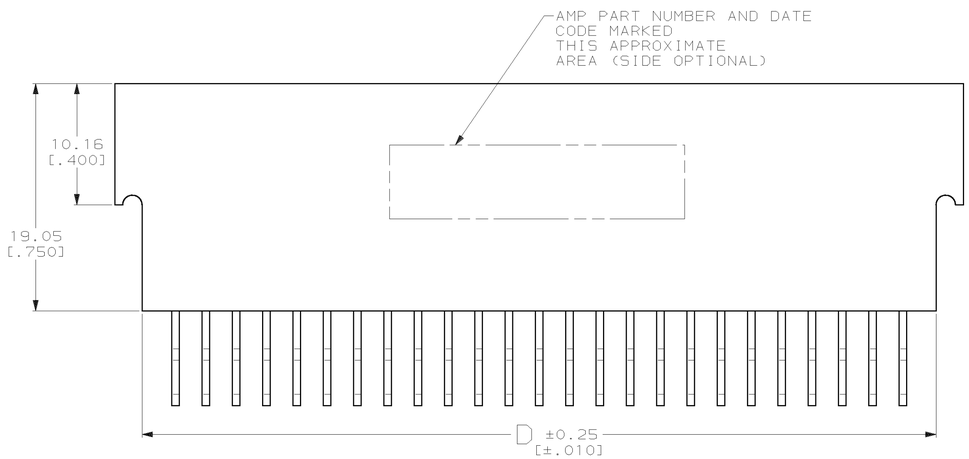

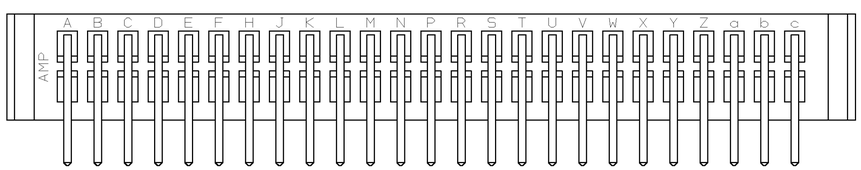

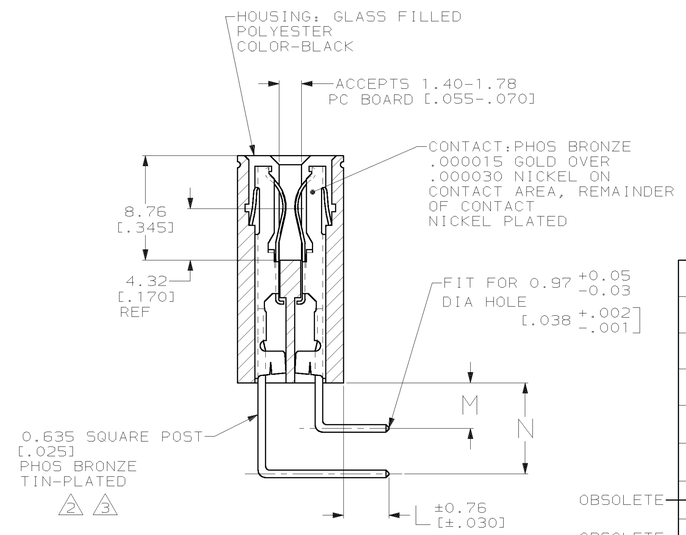

1. PRELIMINARY - NOT RELEASED FOR PRODUCTION.
2. TIN-LEAD PLATED
3. MATTE TIN PLATED

	NO OF POSITIONS	A	B	C	D	L	M	N	PART NUMBER
	23	55.88 [2.200]	60.96 [2.400]	66.04 [2.600]	61.47 [2.420]	3.81 [.150]	3.81 [.150]	7.62 [.300]	3 6-530218-3
	22	53.34 [2.100]	58.42 [2.300]	63.5 [2.500]	58.93 [2.320]	3.81 [.150]	3.81 [.150]	7.62 [.300]	3 5-530218-9
	30	73.66 [2.900]	78.74 [3.100]	83.82 [3.300]	79.25 [3.120]	3.81 [.150]	3.81 [.150]	7.62 [.300]	3 5-530218-6
	17	40.64 [1.600]	45.72 [1.800]	50.8 [2.000]	46.23 [1.820]	3.81 [.150]	3.81 [.150]	7.62 [.300]	3 5-530218-5
	25	60.96 [2.400]	66.04 [2.600]	71.12 [2.800]	66.55 [2.620]	3.81 [.150]	3.81 [.150]	7.62 [.300]	3 5-530218-1
	23	55.88 [2.200]	60.96 [2.400]	66.04 [2.600]	61.47 [2.420]	3.81 [.150]	3.81 [.150]	7.62 [.300]	2 1 1-530218-3
OBSOLETE	~~15~~	~~35.56 [1.400]~~	~~40.64 [1.600]~~	~~45.72 [1.800]~~	~~41.15 [1.620]~~	~~0.381 [.015]~~	~~3.81 [.150]~~	~~7.62 [.300]~~	~~2 1-530218-2~~
OBSOLETE	~~36~~	~~88.9 [3.500]~~	~~93.98 [3.700]~~	~~99.06 [3.900]~~	~~94.49 [3.720]~~	~~3.81 [.150]~~	~~3.81 [.150]~~	~~7.62 [.300]~~	~~2 1-530218-1~~
OBSOLETE	~~10~~	~~22.86 [.900]~~	~~27.94 [1.100]~~	~~33.02 [1.300]~~	~~28.45 [1.120]~~	~~3.81 [.150]~~	~~3.81 [.150]~~	~~7.62 [.300]~~	~~2 1-530218-0~~
	22	53.34 [2.100]	58.42 [2.300]	63.5 [2.500]	58.93 [2.320]	3.81 [.150]	3.81 [.150]	7.62 [.300]	2 530218-9
OBSOLETE	~~50~~	~~124.46 [4.900]~~	~~129.54 [5.100]~~	~~132.33 [5.210]~~	~~130.05 [5.120]~~	~~3.81 [.150]~~	~~3.81 [.150]~~	~~7.62 [.300]~~	~~2 530218-8~~
OBSOLETE	~~40~~	~~99.06 [3.900]~~	~~104.14 [4.100]~~	~~109.22 [4.300]~~	~~104.65 [4.120]~~	~~3.81 [.150]~~	~~3.81 [.150]~~	~~7.62 [.300]~~	~~2 530218-7~~
	30	73.66 [2.900]	78.74 [3.100]	83.82 [3.300]	79.25 [3.120]	3.81 [.150]	3.81 [.150]	7.62 [.300]	2 530218-6
	17	40.64 [1.600]	45.72 [1.800]	50.8 [2.000]	46.23 [1.820]	3.81 [.150]	3.81 [.150]	7.62 [.300]	2 530218-5
OBSOLETE	~~20~~	~~48.26 [1.900]~~	~~53.34 [2.100]~~	~~58.42 [2.300]~~	~~53.85 [2.120]~~	~~3.81 [.150]~~	~~3.81 [.150]~~	~~7.62 [.300]~~	~~2 530218-4~~
OBSOLETE	~~13~~	~~30.48 [1.200]~~	~~35.56 [1.400]~~	~~40.64 [1.600]~~	~~36.07 [1.420]~~	~~3.81 [.150]~~	~~3.81 [.150]~~	~~7.62 [.300]~~	~~2 530218-3~~
OBSOLETE	~~18~~	~~43.18 [1.700]~~	~~48.26 [1.900]~~	~~53.34 [2.100]~~	~~48.77 [1.920]~~	~~3.81 [.150]~~	~~3.81 [.150]~~	~~7.62 [.300]~~	~~2 530218-2~~
	25	60.96 [2.400]	66.04 [2.600]	71.12 [2.800]	66.55 [2.620]	3.81 [.150]	3.81 [.150]	7.62 [.300]	2 530218-1

PART NO

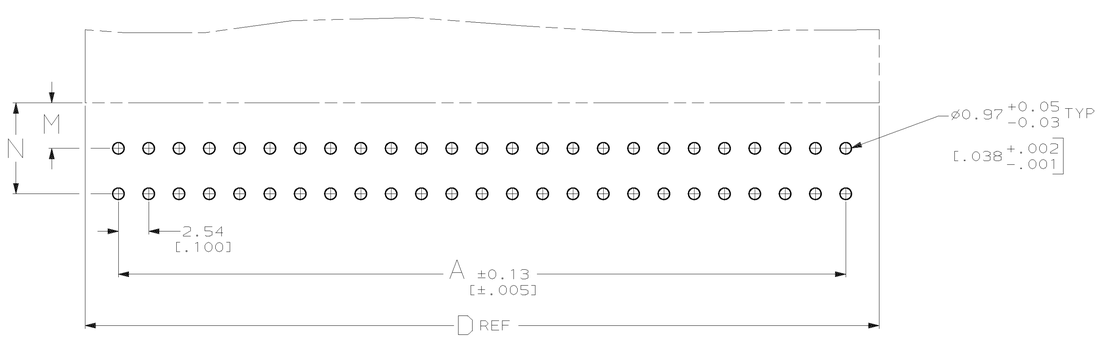

PCB FOOT PRINT DETAIL

THIS DRAWING IS A CONTROLLED DOCUMENT FOR AMP INCORPORATED. IT IS SUBJECT TO CHANGE AND THE CONTROLLING ENGINEERING ORGANIZATION SHOULD BE CONTACTED FOR THE LATEST REVISION.

DO NOT SCALE PRINT.
UNLESS SPECIFIED
DIMENSIONS IN mm [INCHES]
TOLERANCES ON :
2 PLC DEC ± -
3 PLC DEC ± .005
ANGLES ± -

MATERIAL: SEE CALLOUT

FINISH: SEE CALLOUT

DR 8-11-93 A.STAUB BG
CHK 2/8/94 H ROSE
APPD 2/8/94 H ROSE
APPD 2/8/94 M THUMMA
PRODUCT SPEC -
APPLICATION SPEC -
WEIGHT -

AMP Incorporated
Harrisburg, PA 17105-3608

NAME: CONNECTOR ASSEMBLY, TWIN LEAF WITH .025 SQ POST, RIGHT ANGLE .100 CENTERS

SIZE D | CAGE CODE 00779 | DRAWING NO C-530218

SCALE 4:1 | SHEET 1 OF 1

CUSTOMER DRAWING