THIS DRAWING IS UNPUBLISHED. RELEASED FOR PUBLICATION -.- .
© COPYRIGHT - BY TYCO ELECTRONICS CORPORATION. ALL RIGHTS RESERVED.

LOC	DIST
AD	00

REVISIONS

P	LTR	DESCRIPTION	DATE	DWN	APVD
	H	EC 0G3C 0828 04	08FEB05	BSV	JLG

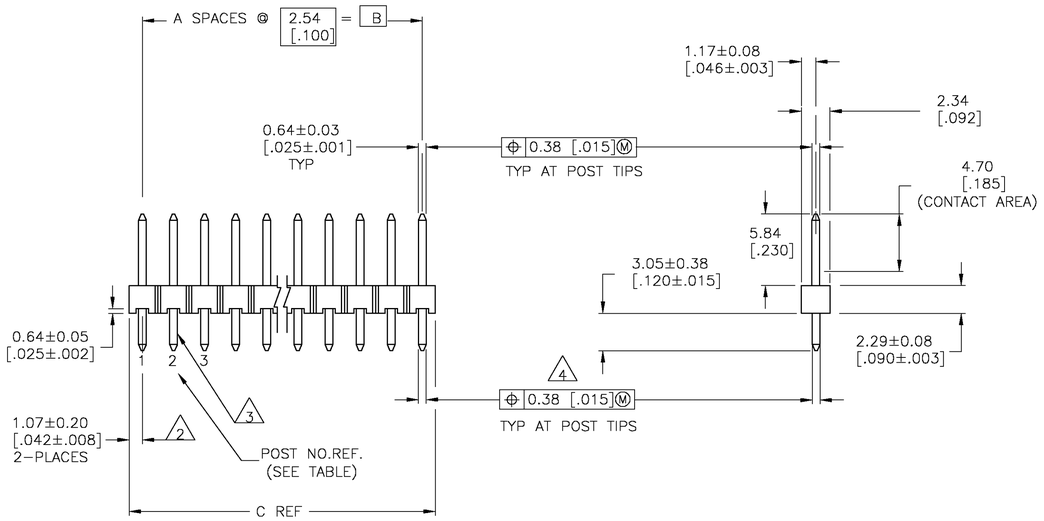

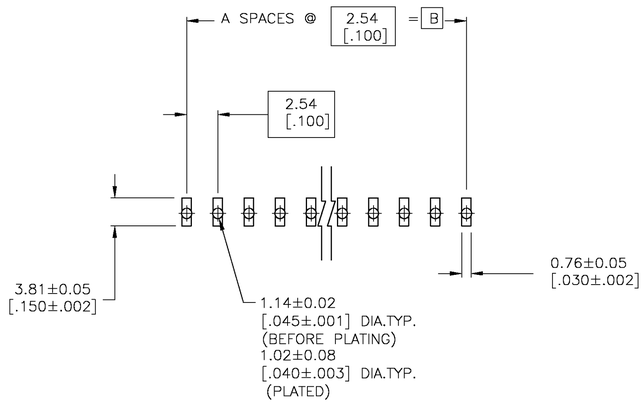

RECOMMENDED PC BOARD MOUNTING DIMENSIONS
FOR .063 [1.60] THICK PC BOARD AND
.012 [.305] STENCIL THICK.

1. TRUE POSITION TOLERANCE OF THE POST TIPS APPLIES WHEN THE HEADERS ARE HELD FLAT AGAINST THE PRINTED CIRCUIT BOARD.

2. THE NOTED DIMENSIONS APPLY AT THE INTERSECTION OF THE POST AND THE HOUSING.

3. RETENTION FEATURES ON SOLDER TAILS, LOCATED AT MANUFACTURERS OPTION.

4. ⊕ .020 Ⓜ FOR KINKED TAILS.

5. 0.000381 [.000015] GOLD IN CONTACT AREA, 0.00254–0.00504 [.000100–.000200] MATTE TIN–LEAD ON SOLDER TAIL, ALL OVER 0.00127 [.000050] NICKEL.

6. HOUSING: LCP, COLOR–BLACK.
POSTS: PHOSPHOR BRONZE

7. 0.000381 [.000015] GOLD IN CONTACT AREA, 0.00254–0.00504 [.000100–.000200] MATTE TIN ON SOLDER TAIL, ALL OVER 0.00127 [.000050] NICKEL.

7	101.19 [3.984]	99.06 [3.900]	39	40	9–146292–0
7	98.65 [3.884]	96.52 [3.800]	38	39	8–146292–9
7	96.11 [3.784]	93.98 [3.700]	37	38	8–146292–8
7	93.57 [3.684]	91.44 [3.600]	36	37	8–146292–7
7	91.03 [3.584]	88.90 [3.500]	35	36	8–146292–6
7	88.49 [3.484]	86.36 [3.400]	34	35	8–146292–5
7	85.95 [3.384]	83.82 [3.300]	33	34	8–146292–4
7	83.41 [3.284]	81.28 [3.200]	32	33	8–146292–3
7	80.87 [3.184]	78.74 [3.100]	31	32	8–146292–2
7	78.33 [3.084]	76.20 [3.000]	30	31	8–146292–1
7	75.79 [2.984]	73.66 [2.900]	29	30	8–146292–0
7	73.25 [2.884]	71.12 [2.800]	28	29	7–146292–9
7	70.71 [2.784]	68.58 [2.700]	27	28	7–146292–8
7	68.17 [2.684]	66.04 [2.600]	26	27	7–146292–7
7	65.63 [2.584]	63.5 [2.500]	25	26	7–146292–6
7	63.09 [2.484]	60.96 [2.400]	24	25	7–146292–5
7	60.55 [2.384]	58.42 [2.300]	23	24	7–146292–4
7	58.01 [2.284]	55.88 [2.200]	22	23	7–146292–3
7	55.47 [2.184]	53.34 [2.100]	21	22	7–146292–2
7	52.93 [2.084]	50.80 [2.000]	20	21	7–146292–1
7	50.39 [1.984]	48.26 [1.900]	19	20	7–146292–0
7	47.85 [1.884]	45.72 [1.800]	18	19	6–146292–9
7	45.31 [1.784]	43.18 [1.700]	17	18	6–146292–8
7	42.77 [1.684]	40.64 [1.600]	16	17	6–146292–7
7	40.23 [1.584]	38.10 [1.500]	15	16	6–146292–6
7	37.69 [1.484]	35.56 [1.400]	14	15	6–146292–5
7	35.15 [1.384]	33.02 [1.300]	13	14	6–146292–4
7	32.61 [1.284]	30.48 [1.200]	12	13	6–146292–3
7	30.07 [1.184]	27.94 [1.100]	11	12	6–146292–2
7	27.53 [1.084]	25.40 [1.000]	10	11	6–146292–1
7	24.99 [.984]	22.86 [.900]	9	10	6–146292–0
7	22.45 [.884]	20.32 [.800]	8	9	5–146292–9
7	19.91 [.784]	17.78 [.700]	7	8	5–146292–8
7	17.37 [.684]	15.24 [.600]	6	7	5–146292–7
7	14.83 [.584]	12.70 [.500]	5	6	5–146292–6
7	12.29 [.484]	10.16 [.400]	4	5	5–146292–5
7	9.75 [.384]	7.62 [.300]	3	4	5–146292–4
7	7.21 [.284]	5.08 [.200]	2	3	5–146292–3
–	–	–	–	–	–
–	–	–	–	–	–
PLATING	C	B	A	NO. OF POSITIONS	PART NUMBER

SUPERSEDED BY 146268–1

OBSOLETE

5	101.19 [3.984]	99.06 [3.900]	39	40	4–146292–0
5	98.65 [3.884]	96.52 [3.800]	38	39	3–146292–9
5	96.11 [3.784]	93.98 [3.700]	37	38	3–146292–8
5	93.57 [3.684]	91.44 [3.600]	36	37	3–146292–7
5	91.03 [3.584]	88.90 [3.500]	35	36	3–146292–6
5	88.49 [3.484]	86.36 [3.400]	34	35	3–146292–5
5	85.95 [3.384]	83.82 [3.300]	33	34	3–146292–4
5	83.41 [3.284]	81.28 [3.200]	32	33	3–146292–3
5	80.87 [3.184]	78.74 [3.100]	31	32	3–146292–2
5	78.33 [3.084]	76.20 [3.000]	30	31	3–146292–1
5	75.79 [2.984]	73.66 [2.900]	29	30	3–146292–0
5	73.25 [2.884]	71.12 [2.800]	28	29	2–146292–9
5	70.71 [2.784]	68.58 [2.700]	27	28	2–146292–8
5	68.17 [2.684]	66.04 [2.600]	26	27	2–146292–7
5	65.63 [2.584]	63.5 [2.500]	25	26	2–146292–6
5	63.09 [2.484]	60.96 [2.400]	24	25	2–146292–5
5	60.55 [2.384]	58.42 [2.300]	23	24	2–146292–4
5	58.01 [2.284]	55.88 [2.200]	22	23	2–146292–3
5	55.47 [2.184]	53.34 [2.100]	21	22	2–146292–2
5	52.93 [2.084]	50.80 [2.000]	20	21	2–146292–1
5	50.39 [1.984]	48.26 [1.900]	19	20	2–146292–0
5	47.85 [1.884]	45.72 [1.800]	18	19	1–146292–9
5	45.31 [1.784]	43.18 [1.700]	17	18	1–146292–8
5	42.77 [1.684]	40.64 [1.600]	16	17	1–146292–7
5	40.23 [1.584]	38.10 [1.500]	15	16	1–146292–6
5	37.69 [1.484]	35.56 [1.400]	14	15	1–146292–5
5	35.15 [1.384]	33.02 [1.300]	13	14	1–146292–4
5	32.61 [1.284]	30.48 [1.200]	12	13	1–146292–3
5	30.07 [1.184]	27.94 [1.100]	11	12	1–146292–2
5	27.53 [1.084]	25.40 [1.000]	10	11	1–146292–1
5	24.99 [.984]	22.86 [.900]	9	10	1–146292–0
5	22.45 [.884]	20.32 [.800]	8	9	146292–9
5	19.91 [.784]	17.78 [.700]	7	8	146292–8
5	17.37 [.684]	15.24 [.600]	6	7	146292–7
5	14.83 [.584]	12.70 [.500]	5	6	146292–6
5	12.29 [.484]	10.16 [.400]	4	5	146292–5
5	9.75 [.384]	7.62 [.300]	3	4	146292–4
5	7.21 [.284]	5.08 [.200]	2	3	146292–3
	4.67 [.184]	2.54 [.100]	1	2	146292–2
	2.13 [.084]	– [–]	0	1	146292–1
PLATING	C	B	A	NO. OF POSITIONS	PART NUMBER

THIS DRAWING IS A CONTROLLED DOCUMENT.

DIMENSIONS: mm [INCHES]

TOLERANCES UNLESS OTHERWISE SPECIFIED:
0 PLC ± –
1 PLC ± –
2 PLC ± 0.51[.02]
3 PLC ± 0.127[.005]
4 PLC ± 0.0127[.0005]
ANGLES ±

MATERIAL 6

FINISH SEE TABLE

DWN T. HOFFMAN 6/12/95
CHK G. DUBNICZKI 1/2/96
APVD G. DUBNICZKI 1/2/96
PRODUCT SPEC –
APPLICATION SPEC –
WEIGHT –

tyco Electronics
Tyco Electronics Corporation
Harrisburg, Pa 17105–3608

NAME
HEADER ASSEMBLY, MODII, BREAKAWAY,SINGLE ROW,HIGH TEMPERATURE, VERTICAL WITH RETENTION FEATURE, W/.025 SQ. POSTS, .100 C/L

SIZE	CAGE CODE	DRAWING NO	RESTRICTED TO
A1	00779	C–146292	–

CUSTOMER DRAWING SCALE 4:1 SHEET 1 OF 1 REV H