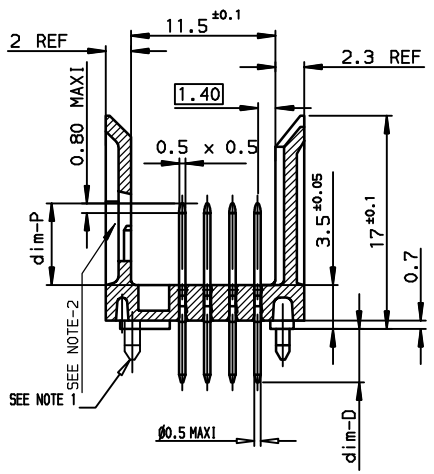

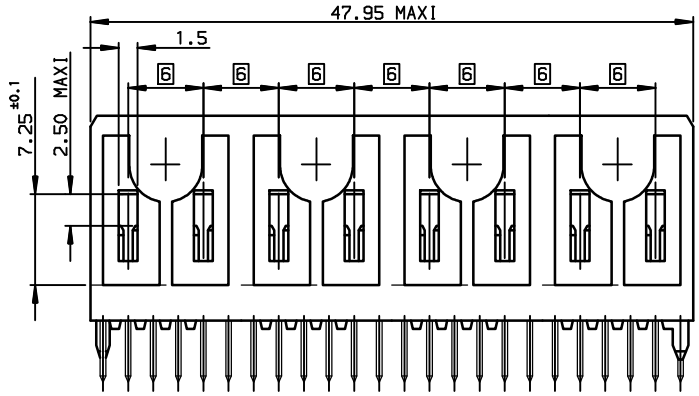

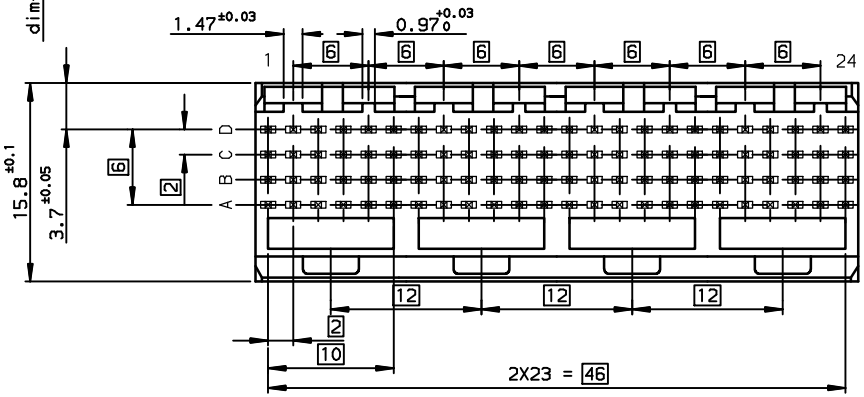

LAYOUT FOR P.C.B

CONNECTOR SIDE VIEW

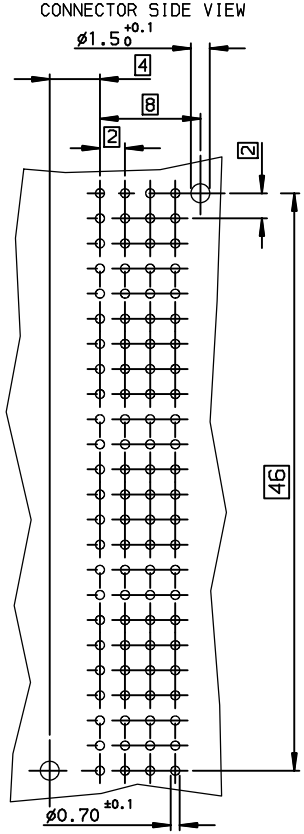

TIN LEAD PART NUMBER

Part number: HM1W43xyR000Hz / HM1W43xyR040Hz

	Replace x by (dim-P ±0.10)				Replace y by
	ROW-A	ROW-B	ROW-C	ROW-D	
A =	5.00	5.00	5.00	5.00	T if dim-D = 4.25±0.25
B =	6.50	5.00	5.00	5.00	B if dim-D = 3.60±0.25
C =	6.50	5.75	5.75	6.50	Replace z by (Performance level)
D =	6.50	6.50	6.50	6.50	
E =	5.75	7.25	5.75	5.75	7: 2µ gold mini 4 sides
H =	8.00	8.00	7.25	6.50	
K =	6.50	8.00	6.50	6.50	6: if PL1
L =	5.75	5.75	5.75	5.75	5: if PL2
M =	7.25	7.25	7.25	7.25	4: if PL3
N =	8.00	8.00	8.00	8.00	(*) - 040H0

(*) - ACCORDING TO BELLCORE SPECIFICATION (4 GAZES)

LEAD FREE PART NUMBER

Part number: HM1W43xyR000HzLF/ HM1W43xyR040HzLF

	Replace x by (dim-P ±0.10)				Replace y by
	ROW-A	ROW-B	ROW-C	ROW-D	
A =	5.00	5.00	5.00	5.00	T if dim-D = 4.25±0.25
B =	6.50	5.00	5.00	5.00	B if dim-D = 3.60±0.25
C =	6.50	5.75	5.75	6.50	Replace z by (Performance level)
D =	6.50	6.50	6.50	6.50	
E =	5.75	7.25	5.75	5.75	7: 2µ gold mini 4 sides
H =	8.00	8.00	7.25	6.50	
K =	6.50	8.00	6.50	6.50	6: if PL1
L =	5.75	5.75	5.75	5.75	5: if PL2
M =	7.25	7.25	7.25	7.25	4: if PL3
N =	8.00	8.00	8.00	8.00	(*) - 040H0

(*) - ACCORDING TO BELLCORE SPECIFICATION (4 GAZES)

GENERAL CHARACTERISTICS AND ROHS INFORMATIONS:

SEE DRAWING C-8626-0005

NOTE-1: 2 PEGS AT EACH END ONLY
NOTE-2: CAVITY FOR CODING KEY MOUNTING AND CABLE CONNECTOR LATCH

REDUCED SCALE SHEET

European Views

rev	ecn no	dr	date
E	-	GRI	2001/05/09
F	LS05-001	MLE	2005/03/15
G	LS06-0095	LGO	2006/06/30
-	-	-	-
-	-	-	-
-	-	-	-
-	-	-	-

www.fciconnect.com

surface ISO 1302 ✓ | tolerance std ISO 406 ISO 1101 | TOLERANCES UNLESS OTHERWISE SPECIFIED | projection | mm

Dr	CHAMPION	1991/07/30	ANGULAR	LINEAR	0.X	±0.1
Eng	LENOIR	1991/07/30			0.XX	±0.1
Chr	LEGARE	1991/07/30	0.XX° ±2°		0.XXX	±0.1
Appr	LEGARE	1991/07/30	Product family		METRAL	

size A3 | Scale 2.5 | ECN LS06-0095 | Spec ref -

title: METRAL STRAIGHT HEADER - 96 WAY
SOLDER TAILS/WIDE BODY

dwg no C-8626-0015 | Rev. G

catalog no - | CUSTOMER | sheet 1 of 1

Copyright FCI.

REV F - 2006-04-17

PDM: Rev:G STATUS:Released Printed: Aug 26, 2006