75237

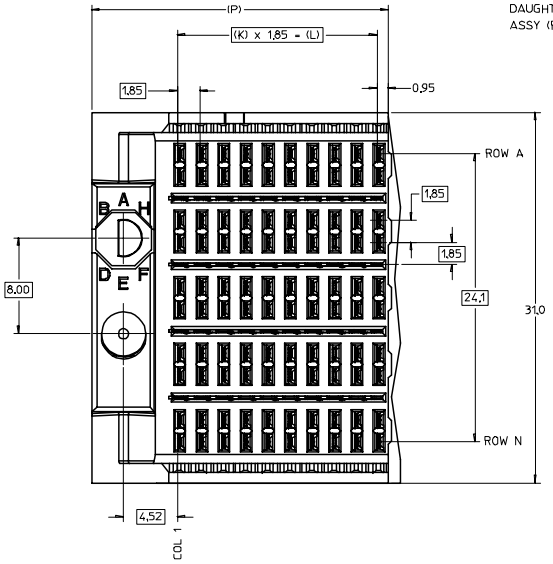

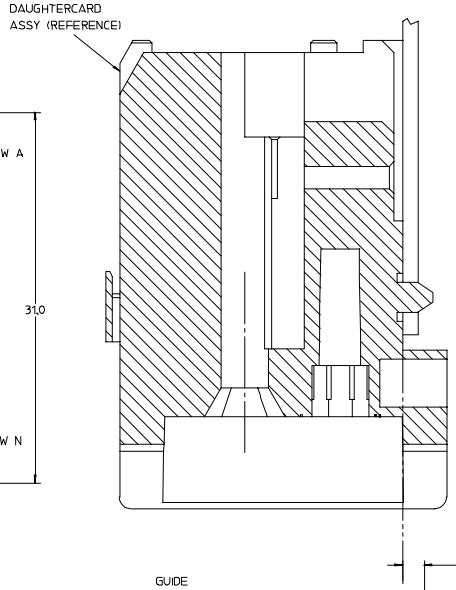

NOTES:
1. MATERIAL: HOUSING - LIQUID CRYSTAL POLYMER (LCP) GLASS-FILLED. UL 94V-0. COLOR - GRAY. SIGNAL CONTACT AND GROUND BLADE - HIGH PERFORMANCE COPPER ALLOY.
2. FINISHES: SELECTIVE GOLD (Au) ON CONTACT AREA, SELECTIVE TIN/LEAD (Sn/Pb) ON PCB TAILS. NICKEL (Ni) OVERALL.
3. THIS PART CONFORMS TO MOLEX PRODUCT SPECIFICATION PS-75221-999.
4. FOR MIXED CONTACT MATING LENGTHS CONSULT MOLEX FOR AVAILABILITY. CONTACT PAIRS MUST BE THE SAME LENGTH.
5. FOR SPECIFIC PART NUMBER AND MATING INFORMATION PLEASE REFER TO CHART.
6. PACKAGE PER PK-70873-565.
7. MARK PART NUMBER AND DATE CODE APPROXIMATELY WHERE SHOWN.
8. OPTIONAL HOLE LOCATION FOR GROUNDED GUIDE PIN OR ADDITIONAL GUIDE PIN SUPPORT. FOR GROUNDED GUIDE PIN, HOLE TO BE PLATED. DRILL SIZE Ø2.58, PAD SIZE Ø5.50
9. THESE PARTS CONFORM TO MOLEX COSMETIC SPECIFICATION PS-45499-002 CLASS B.

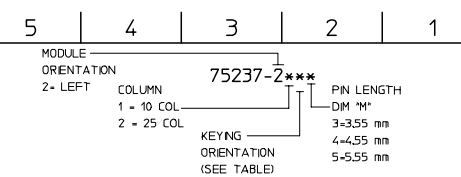

PART NUMBER TABLE				
ASSY PART NO.	K	L	P	TOTAL NO. OF DIFFERENTIAL PAIRS
75237-210*	9	16.65	24.78	50
75237-220*	24	44.40	52.53	125

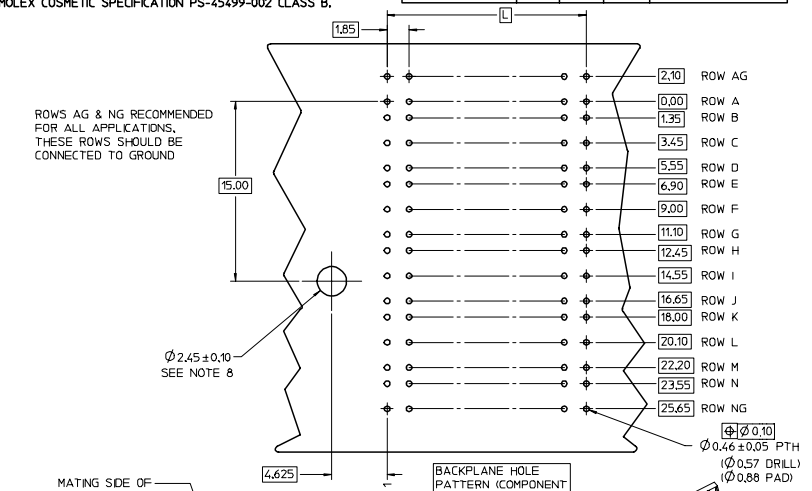

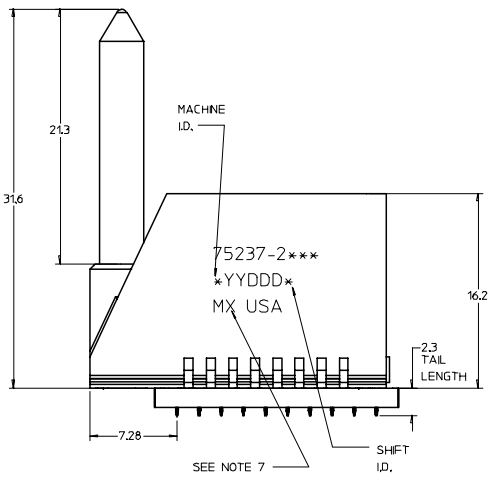

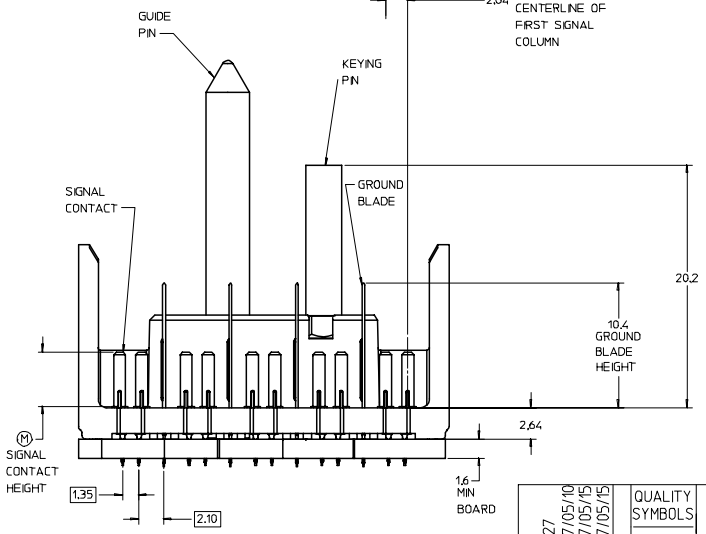

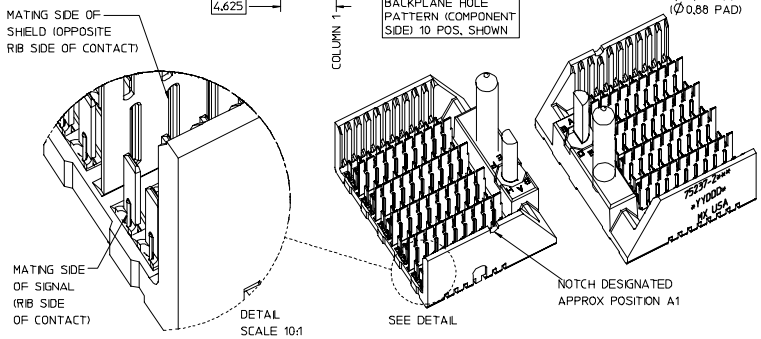

P/N 75237-( )	-**0*	-**1*	-**2*	-**3*	-**4*	-**5*	-**6*	-**7*	-**8*
KEYING PIN ORIENTATION	0	A	B	C	D	E	F	G	H

REV	DESCRIPTION
B	REVISED EC NO: UCP2007-2827 DRWN: JBINGHAM 2007/05/10 CHKD: 2007/05/15 APPR: SREED 2007/05/15

QUALITY SYMBOLS: ▼-0 ; (C)-0

GENERAL TOLERANCES (UNLESS SPECIFIED)

	mm	INCH
4 PLACES	±---	±---
3 PLACES	±---	±---
2 PLACES	±---	±---
1 PLACE	±---	±---
ANGULAR	±---°	

DRAFT WHERE APPLICABLE MUST REMAIN WITHIN DIMENSIONS

SCALE 5:1 | DESIGN UNITS METRIC | THIRD ANGLE PROJECTION | REVISE ON CAD ONLY

DIMENSION STYLE: MM ONLY

DRAWN BY: NMARTIN 2004/03/11
CHECKED BY: SREED 2004/03/11
APPROVED BY: CBIXLER 2004/03/11

TITLE: GBX 5-PAIR LEFT END BACKPLANE SALES ASSEMBLY

molex MOLEX INCORPORATED

MATERIAL NO.: SEE CHART | DOCUMENT NO.: SD-75237-210 | SHEET NO.: 1 OF 1

THIS DRAWING CONTAINS INFORMATION THAT IS PROPRIETARY TO MOLEX INCORPORATED AND SHOULD NOT BE USED WITHOUT WRITTEN PERMISSION

D