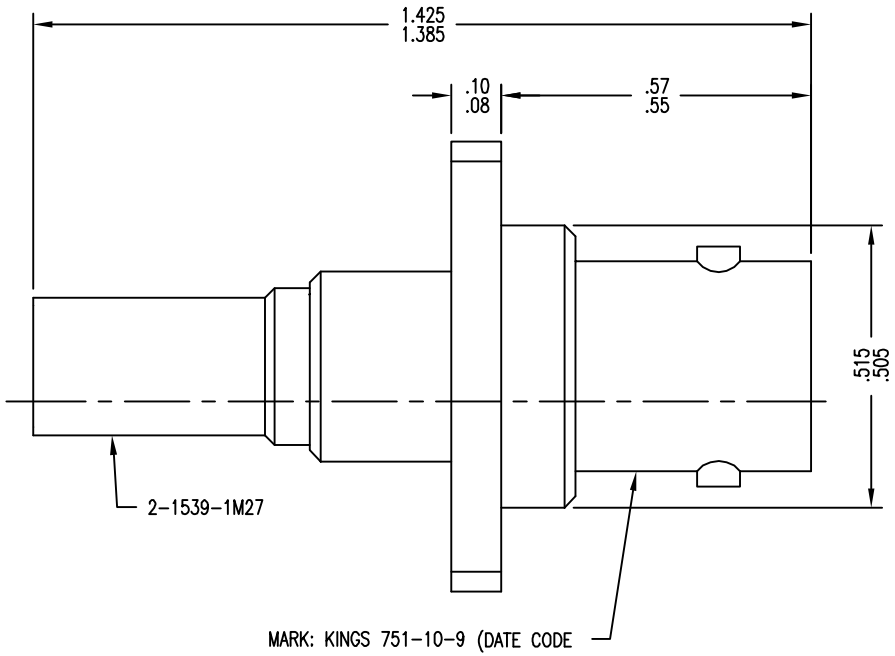

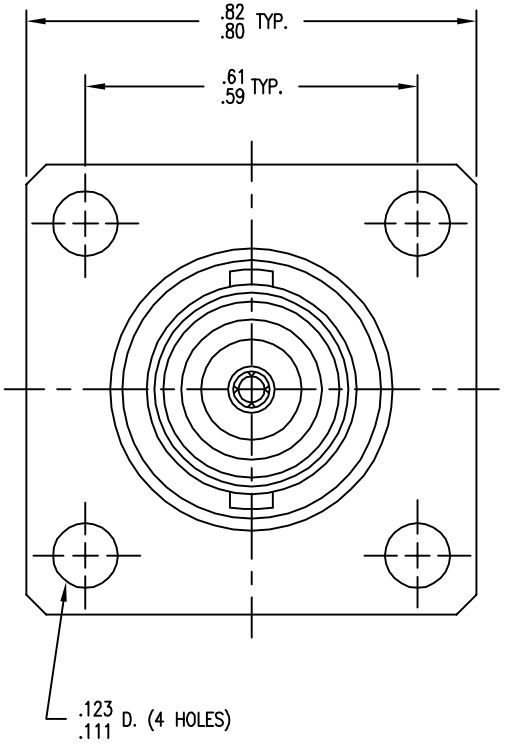

751-10-9

NOTES:

1. FOR USE WITH BOEING BMS13-65 OF & ADAMS RUSSELL FC14Z CABLES.
2. FOR CABLING INSTRUCTIONS SEE 3-546-1.
3. FOR CRIMPING USE DIE KTH-2161.
4. INTERFACE PER MIL-STD-348, FIG. 301-2.
5. FOR USE WITH .140 MAX. PANEL.
6. CENTER CONTACT (1-507-38MA9) SUPPLIED UNASSEMBLED.
7. MARK PACKAGE: KINGS 751-10-9 (DATE CODE)
8. MATERIALS:
   INSULATOR: TEFLON, ASTM D1710
   K-GRIP SLEEVE; COM. BRONZE, ALLOY ASTM B135
   CENTER CONTACT F: BER. COP., ASTM B196
   ALL OTHER METAL PARTS: BRASS, ASTM B16
9. FINISHES:
   CENTER CONTACT: .000050 MIN GOLD PLATE PER ASTM B488 OVER .000050 MIN NICKEL PER AMS-QQ-N-290 (RoHS)
   ALL OTHER METAL PARTS: .000050 MIN NICKEL PER AMS-QQ-N-290 OVER .000050 MIN COPPER PER ASTM B734 (RoHS)
10. ELECTRICAL CHARACTERISTICS:
   NOMINAL IMPEDANCE: 50 OHMS
   VOLTAGE RATING: 500 VRMS
   FREQUENCY RANGE: DC TO 4 GHz
   INSERTION LOSS: DC TO 2.8 GHz, 0.05 dB MAX
   2.8 TO 5.0 GHz, 0.12 dB MAX
11. WEIGHT: 16.2 GRAMS

REVISIONS

ISSUE	CHANGES
B	ER 8354 RMS 05/29/08
C	REVISED PER DMF304 & ER35559 TZ 11/08/11

CUSTOMER SALES DRAWING

THIS DRAWING, THE DESIGNS AND IDEAS EMBODIED IN THE DEVICE TO WHICH IT RELATES, AND THE METHOD OF PRODUCING THE DEVICE, ARE THE PROPERTY OF WINCHESTER ELECTRONICS CORPORATION AND SHALL NOT BE EMPLOYED, COPIED, OR DISCLOSED TO ANYONE, IN ANY MANNER WITHOUT THE CONSENT OF WINCHESTER ELECTRONICS CORPORATION.

SCALE 4:1

APPROX SURFACE AREA

CAGE CODE: 91836

REF: BOEING

JACK, PANEL, BNC

DRAWN	JCA	DATE	04/06/92
DESIGN	JT	DATE	04/07/92
APPR.		DATE	

KINGS by WINCHESTER ELECTRONICS
Winchester Electronics
62 Barnes Industrial Road North
Wallingford, CT 06492

751-10-9