OptoSupply
Light It Up

Super Flux Pure White LED

OSW44DZ5D1P

■Features

- High Luminous Super Flux Output
- Superior Weather-resistance
- UV Resistant Epoxy
- Long Lifetime Operation
- Water Clear Type
-

■Applications

- General Purpose Indicators
- Small Area Illuminations
- Back Lighting
- Other Lighting

■Outline Dimension

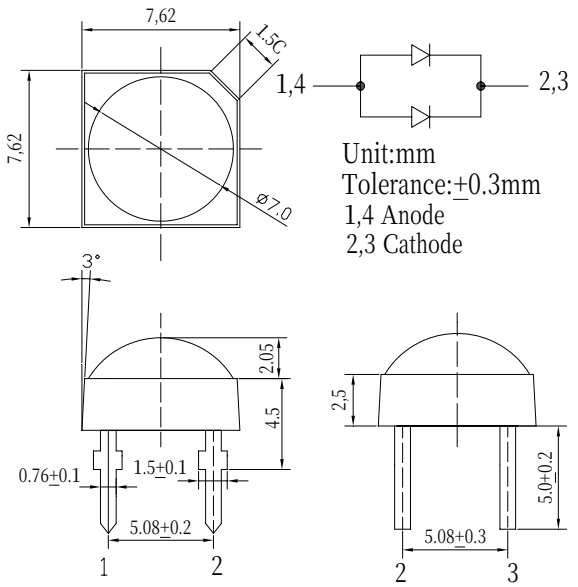

■Absolute Maximum Rating (Ta=25℃)

Item	Symbol	Value	Unit
DC Forward Current	I_F	60	mA
Pulse Forward Current*	I_{FP}	120	mA
Reverse Voltage	V_R	5	V
Power Dissipation	P_D	228	mW
Operating Temperature	Topr	-30 ~ +85	℃
Storage Temperature	Tstg	-40 ~ +100	℃
Lead Soldering Temperature	Tsol	260℃/ 5sec	-

*Pulse width Max.10ms , Duty ratio max 1/10

■Directivity

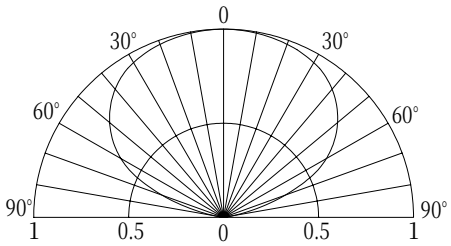

■Electrical -Optical Characteristics (Ta=25℃)

Item	Symbol	Condition	Min.	Typ.	Max.	Unit
DC Forward Voltage	V_F	I_F=50mA	2.9	3.2	3.8	V
DC Reverse Current	I_R	V_R=5V	-	-	10	μA
Luminous Intensity*	Iv	I_F=50mA	5800	7000	-	mcd
Luminous Flux	Φv	I_F=50mA	16	20	-	lm
Chromaticity Coordinates*	x	I_F=50mA	-	0.31	-	
	y	I_F=50mA	-	0.33	-	
50% Power Angle	$2\theta_{1/2}$	I_F=50mA	-	130	-	deg

*1 Tolerance of chromaticity coordinate is ±10%

*2 Tolerance of luminous intensity is ±15%

LED & Application Technologies

ATTENTION
OBSERVE PRECAUTIONS
ELECTROSTATIC
SENSITIVE DEVICES