Toggle Switches

Sealed Ultraminiature Toggle Switches — TK60 Series

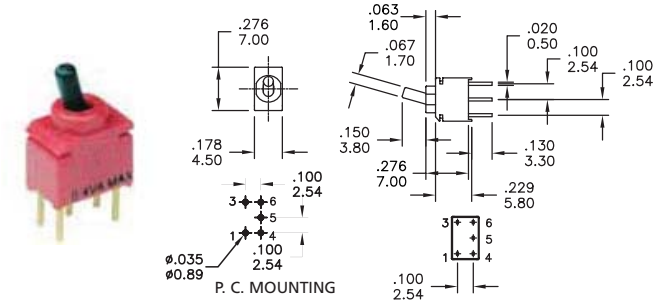

TK60S1A1B1T2RE SP THT

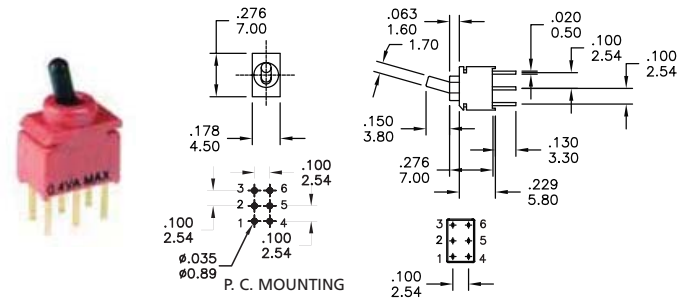

TK60D1A1B1T2RE DP THT

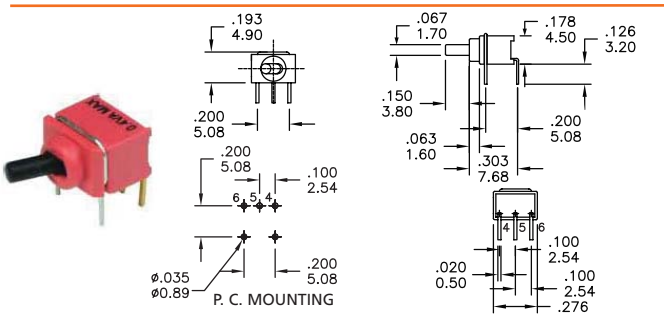

TK60S1A1B1T6RE SP THT Right Angle

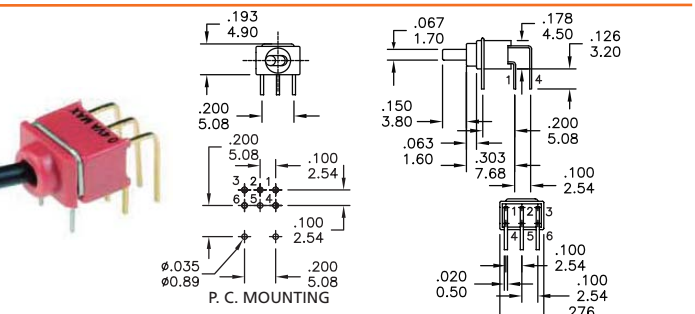

TK60D1A1B1T6RE DP THT Right Angle

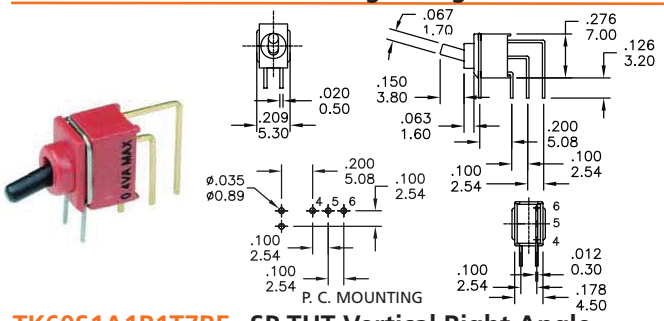

TK60S1A1B1T7RE SP THT Vertical Right Angle

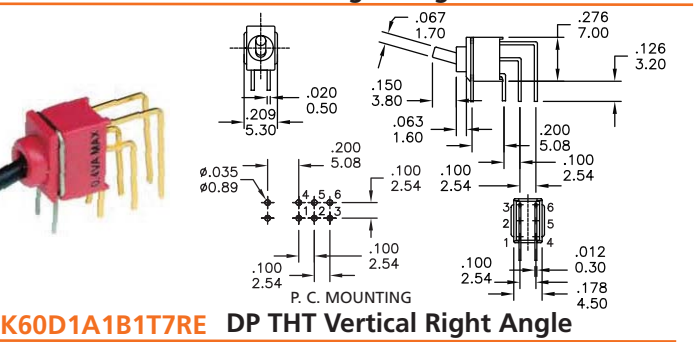

TK60D1A1B1T7RE DP THT Vertical Right Angle

No. Poles	Model No.	Switch Function			Connected Terminals / Shematic		
		Position 1	Position 2	Position 3	Position 1	Position 2	Position 3
SP	TK60S1	ON	NONE	ON	5-6	N/A	5-4
	TK60S2	ON	NONE	MOM			
	TK60S3	ON	OFF	ON		OPEN	
	TK60S9	OFF	NONE	ON	OPEN	N/A	4-6
DP	TK60D1	ON	NONE	ON	2-3,5-6	N/A	2-1,5-4
	TK60D2	ON	NONE	MOM			
	TK60D3	ON	OFF	ON		OPEN	
	TK60D9	OFF	NONE	ON	OPEN	N/A	

How to order:

TK60 [1] [2] [3] [4] [5] [6] [7]

1 POLES & SWITCH FUNCTION:
- S1 SP ON-NONE-ON
- S2 SP ON-NONE-MOM
- S3 SP ON-OFF-ON
- S9 SP OFF-NONE-ON
- D1 DP ON-NONE-ON
- D2 DP ON-NONE-MOM
- D3 DP ON-OFF-ON
- D9 DP OFF-NONE-ON

2 ACTUATOR:
- A1 Height=3.80 mm

3 BUSHING:
- B1 Height=1.60 mm

4 TERMINALS:
- T2 PC Thru Hole
- T6 PC Thru Hole Right Angle
- T7 PC Thru Hole Vertical Right Angle

5 CONTACT MATERIAL:
- AU Gold

6 SEAL:
- E Epoxy (Standard)

7 ROHS & LEAD FREE:
- blank RoHS Compliant (Standard)
- V RoHS Compliant & Lead Free

General Specifications:

MATERIALS
- » Actuator: Glass filled nylon 6/6(UL94V-0) or 4/6 flame retardant, heat stabilized, with standard internal o-ring seal.
- » Housing & Base: Glass filled nylon 6/6(UL94V-0)
- » Switching Support: Steel, with nickel plated
- » Contact/Terminals: Silver or gold plated over copper alloy

MECHALNICAL
- » Operating Temperature: -30°C to +85°C
- » Mechanical Life: 40,000 cycles
- » Degree of Protection: IP67

CONTACKT RATING
- » 0.4 VA max. @ 20V AC/DC max.

ELECTRICAL
- » Contact Resistance: 100mΩ typ. initial @ 2-4 VDC,
- » Isulation Resistance: 500MΩ min.
- » Doeletric Strength: 500 V RMS @sea level