716-0094, 716-0100, 716-0112, 716-0124

Wing – Handle
small version

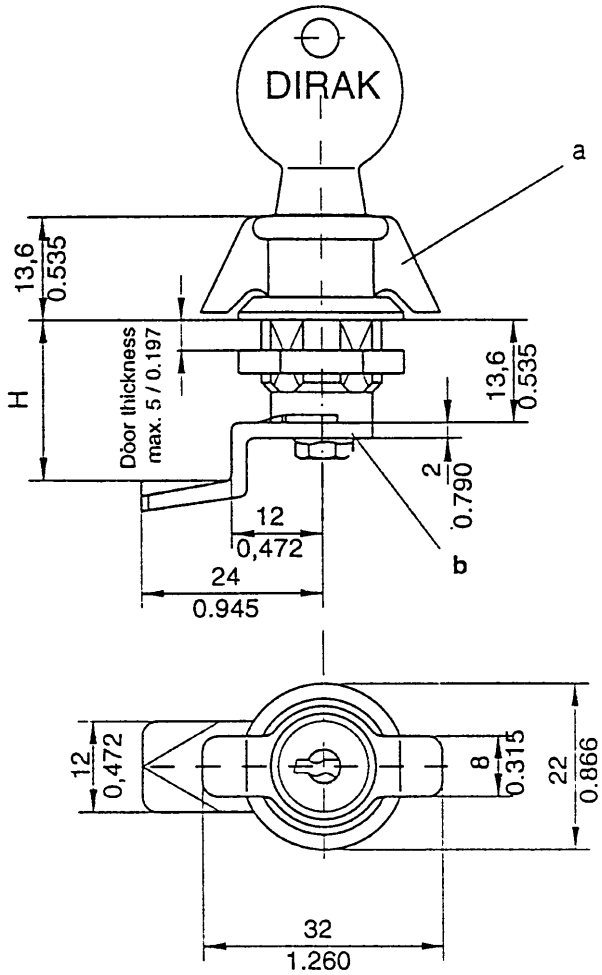

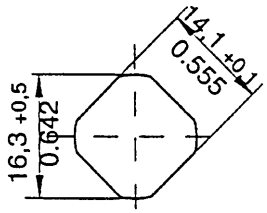

Cut–out

Wing – Handle with 90° stroke, RH and LH application.
This handle consists of 2 parts (handle and cam). An assembled handle can be mounted through cut–out without dismantling.

The small grab-collar allows easy opening.

To be ordered separately:

a) Wing handle with housing (zinc die), screw and:	Chrome plated		Black coated	
	nut	earthing nut	nut	earthing nut
Non – locking	220 - 9301	220 - 9302	220 - 9307	220 - 9308
Keyed alike DIRAK 2233X	220 - 9303	220 - 9304	220 - 9309	220 - 9310
Keyed different or random	220 - 9305	220 - 9306	220 - 9311	220 - 9312
b) Cam (steel, galv.) H in mm / in. 7,5 / 0.295	220 - 0503			
13,5 / 0.535	220 - 0501			
19,5 / 0.768	220 - 0502			
On request assembled by DIRAK	220 - 0001			

Special cams on request.

All locks supplied with 2 keys.

03.95

DIRAK GMBH & Co KG • Kaiserstraße 55 - 59 • 58332 Schwelm • Tel.: (02336) 92 93 - 0 • Fax: (02336) 8 37 04