HB56SW864ES Series

8,388,608-word × 64-bit (ECC) High Density Dynamic RAM Module, 168-pin JEDEC Standard Outline Buffered 8 byte DIMM

HITACHI

ADE-203-609 (Z)
Preliminary - Rev. 0.0
Jun. 14, 1996

Description

The HB56SW864ES belongs to 8 Byte DIMM (Dual In-line Memory Module) family, and has been developed as an optimized main memory solution for 4 and 8 Byte processor applications. The HB56SW864ES is a 8M × 64 dynamic RAM module, mounted 32 pieces of 16-Mbit DRAM (HM51W16405) sealed in TCP package and a piece of 16-bit BiCMOS line driver (74ALVCH16244) sealed in TSSOP package and a piece of 20-bit CMOS line driver (74LVCH16827) sealed in TSSOP package. The HB56SW864ES offers Extended Data Out (EDO) Page Mode as a high speed access mode. An outline of the HB56SW864ES is 168-pin socket type package (dual lead out). Therefore, the HB56SW864ES makes high density mounting possible without surface mount technology. The HB56SW864ES provides common data inputs and outputs. Decoupling capacitors are mounted beside each TCP on the module board.

Features

- 168-pin socket type package (Dual lead out)
  - — Lead pitch: 1.27 mm
- Single 3.3 V (+0.3, –0.15 V) supply
- High speed
  - — Access time: t_{RAC} = 60/70/80 ns (max)
  - — Access time: t_{CAC} = 20/23/25 ns (max)
- Low power dissipation
  - — Active mode: 4.90/4.32/4.03 W (max)
  - — Standby mode (TTL): 230 mW (max)
  - — Standby mode (CMOS): 115 mW (max)
- Buffered input except $\overline{RAS}$ and DQ
- 4 byte interleave enabled, dual address input (A0/B0)
- EDO page mode capability
- 4,096 refresh cycle: 64 ms
- 2 variations of refresh
  - — $\overline{RAS}$-only refresh
  - — $\overline{CAS}$-before-$\overline{RAS}$ refresh

Ordering Information

Type No.	Access time	Package	Contact pad
HB56SW864ES-6B	60 ns	168-pin dual lead out socket type	Gold
HB56SW864ES-7B	70 ns		
HB56SW864ES-8B	80 ns		

Pin Arrangement

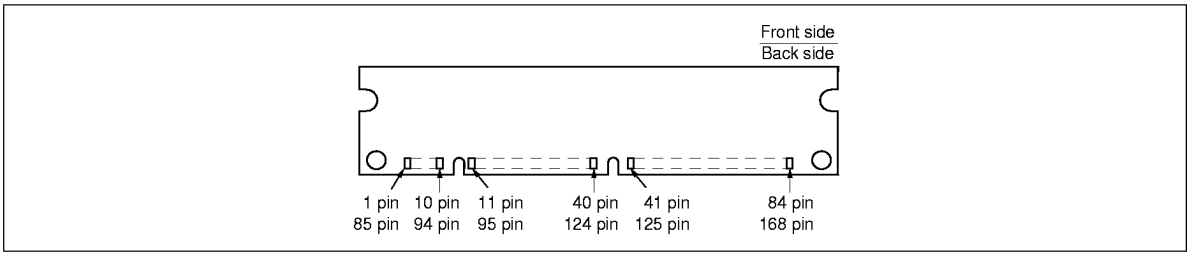

Pin Arrangement

Pin No.	Pin Name	Pin No.	Pin Name	Pin No.	Pin Name	Pin No.	Pin Name
1	V_{SS}	13	DQ9	25	NC	37	A8
2	DQ0	14	DQ10	26	V_{CC}	38	A10
3	DQ1	15	DQ11	27	$\overline{WE0}$	39	NC
4	DQ2	16	DQ12	28	$\overline{CE0}$	40	V_{CC}
5	DQ3	17	DQ13	29	$\overline{CE2}$	41	NC
6	V_{CC}	18	V_{CC}	30	$\overline{RE0}$	42	NC
7	DQ4	19	DQ14	31	$\overline{OE0}$	43	V_{SS}
8	DQ5	20	DQ15	32	V_{SS}	44	$\overline{OE2}$
9	DQ6	21	DQ16	33	A0	45	$\overline{RE2}$
10	DQ7	22	NC	34	A2	46	$\overline{CE4}$
11	NC	23	V_{SS}	35	A4	47	$\overline{CE6}$
12	V_{SS}	24	NC	36	A6	48	$\overline{WE2}$

Pin Arrangement (cont)

Pin No.	Pin Name	Pin No.	Pin Name	Pin No.	Pin Name	Pin No.	Pin Name
49	V_{CC}	79	PD1	109	NC	139	DQ56
50	NC	80	PD3	110	V_{CC}	140	DQ57
51	NC	81	PD5	111	NC	141	DQ58
52	DQ18	82	PD7	112	$\overline{CE1}$	142	DQ59
53	DQ19	83	ID0 (V_{SS})	113	$\overline{CE3}$	143	V_{CC}
54	V_{SS}	84	V_{CC}	114	$\overline{RE1}$	144	DQ60
55	DQ20	85	V_{SS}	115	NC	145	NC
56	DQ21	86	DQ36	116	V_{SS}	146	NC
57	DQ22	87	DQ37	117	A1	147	NC
58	DQ23	88	DQ38	118	A3	148	NC
59	V_{CC}	89	DQ39	119	A5	149	DQ61
60	DQ24	90	V_{CC}	120	A7	150	NC
61	NC	91	DQ40	121	A9	151	DQ63
62	NC	92	DQ41	122	A11	152	V_{SS}
63	NC	93	DQ42	123	NC	153	DQ64
64	NC	94	DQ43	124	V_{CC}	154	DQ65
65	DQ25	95	NC	125	NC	155	DQ66
66	NC	96	V_{SS}	126	B0	156	DQ67
67	DQ27	97	DQ45	127	V_{SS}	157	V_{CC}
68	V_{SS}	98	DQ46	128	NC	158	DQ68
69	DQ28	99	DQ47	129	$\overline{RE3}$	159	DQ69
70	DQ29	100	DQ48	130	$\overline{CE5}$	160	DQ70
71	DQ30	101	DQ49	131	$\overline{CE7}$	161	NC
72	DQ31	102	V_{CC}	132	$\overline{PDE}$	162	V_{SS}
73	V_{CC}	103	DQ50	133	V_{CC}	163	PD2
74	DQ32	104	DQ51	134	NC	164	PD4
75	DQ33	105	DQ52	135	NC	165	PD6
76	DQ34	106	NC	136	DQ54	166	PD8
77	NC	107	V_{SS}	137	DQ55	167	ID1 (V_{SS})
78	V_{SS}	108	NC	138	V_{SS}	168	V_{CC}

Pin Description

Pin Name	Function
A0 to A11, B0	Address Input : A0 to A11, B0 Row Address : A0 to A11, B0 Column Address : A0 to A9, B0 Refresh Address : A0 to A11, B0
DQ0 to DQ7, DQ9 to DQ16 DQ18 to DQ25, DQ27 to DQ34 DQ36 to DQ43, DQ45 to DQ52 DQ54 to DQ61, DQ63 to DQ70	Data-in/Data-out
$\overline{RE0}$ to $\overline{RE3}$	Row Address Strobe
$\overline{CE0}$ to $\overline{CE7}$	Column Address Strobe
$\overline{WE0}$, $\overline{WE2}$	Read/Write Enable
$\overline{OE0}$, $\overline{OE2}$	Output Enable
V_{CC}	Power Supply
V_{SS}	Ground
PD1 to PD8	Presence Detect
ID0, ID1	ID bit
$\overline{PDE}$	Presence Detect Enable
NC	Non Connection

Presence Detect Pin Assignment

		$\overline{PDE}$ = Low			$\overline{PDE}$ = High
Pin Name	**Pin No.**	**-6B**	**-7B**	**-8B**	**All**
PD1	79	0	0	0	High-Z
PD2	163	0	0	0	High-Z
PD3	80	1	1	1	High-Z
PD4	164	1	1	1	High-Z
PD5	81	1	1	1	High-Z
PD6	165	1	0	1	High-Z
PD7	82	1	1	0	High-Z
PD8	166	1	1	1	High-Z

1: High Level (Driver Output)

0: Low Level (Driver Output)

Block Diagram

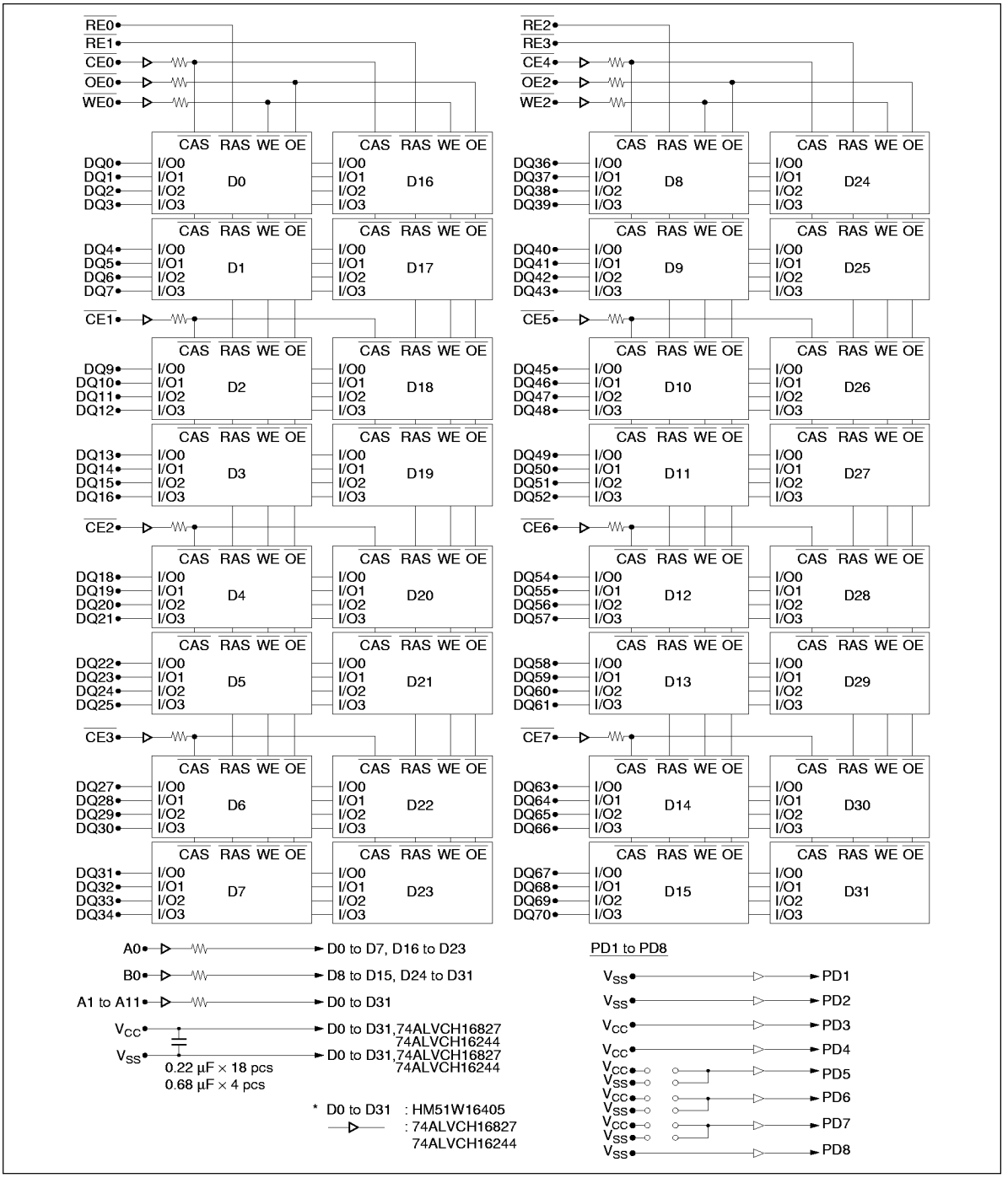

Absolute Maximum Ratings

Parameter	Symbol	Value	Unit
Voltage on any pin relative to V_{SS}.	V_T	–0.5 to +4.6	V
Supply voltage relative to V_{SS}	V_{CC}	–0.5 to +4.6	V
Short circuit output current	Iout	50	mA
Power dissipation	Pt	33	W
Operating temperature	Topr	0 to +70	°C
Storage temperature	Tstg	–55 to +125	°C

Electrical Characteristics

Recommended DC Operating Condition (Ta = 0 to 70°C)

Parameter	Symbol	Min	Typ	Max	Unit	Note
Supply voltage	V_{SS}	0	0	0	V	
	V_{CC}	3.15	3.3	3.6	V	1
Input high voltage	V_{IH}	2.0	—	V_{CC} +0.3	V	1
Input low voltage	V_{IL}	–0.3	—	0.8	V	1

Note: 1. All voltage referenced to V_{SS}.

DC Characteristics (Ta = 0 to 70°C, V_{CC} = 3.3 V, +0.3, –0.15 V, V_{SS} = 0 V)

		HB56SW864ES								
		-6B		-7B		-8B				
Parameter	**Symbol**	**Min**	**Max**	**Min**	**Max**	**Min**	**Max**	**Unit**	**Test condition**	**Note**
Operating current	I_{CC1}	—	1360	—	1200	—	1120	mA	t_{RC} = min	1, 2
Standby current	I_{CC2}	—	64	—	64	—	64	mA	TTL interface $\overline{RAS}$, $\overline{CAS}$ = V_{IH} Dout = High-Z	
		—	32	—	32	—	32	mA	CMOS interface $\overline{RAS}$, $\overline{CAS}$ ≥ V_{CC} –0.2 V Dout = High-Z	
$\overline{RAS}$-only refresh current	I_{CC3}	—	1360	—	1200	—	1120	mA	t_{RC} = min	2
Standby current	I_{CC5}	—	160	—	160	—	160	mA	$\overline{RAS}$ = V_{IH}, $\overline{CAS}$ = V_{IL} Dout = enable	1
$\overline{CAS}$-before-$\overline{RAS}$ refresh current	I_{CC6}	—	1360	—	1200	—	1120	mA	t_{RC} = min	
EDO page mode current	I_{CC7}	—	1680	—	1520	—	1360	mA	t_{HPC} = min	1, 3
Input leakage current	I_{LI}	–10	10	–10	10	–10	10	μA	0 V ≤ Vin ≤ 4.6 V	
Output leakage current	I_{LO}	–10	10	–10	10	–10	10	μA	0 V ≤ Vout ≤ 4.6 V Dout = disable	
Output high voltage	V_{OH}	2.4	V_{CC}	2.4	V_{CC}	2.4	V_{CC}	V	High Iout = –2 mA	
Output low voltage	V_{OL}	0	0.4	0	0.4	0	0.4	V	Low Iout = 2 mA	

Notes: 1. I_{CC} depends on output load condition when the device is selected, I_{CC} max is specified at the output open condition.
2. Address can be changed once or less while $\overline{RAS}$ = V_{IL}.
3. Address can be changed once or less while $\overline{CAS}$ = V_{IH}.

Capacitance (Ta = 25°C, V_{CC} = 3.3 V +0.3, –0.15 V)

Parameter	**Symbol**	**Typ**	**Max**	**Unit**	**Notes**
Input capacitance (Address)	C_{I1}	—	20	pF	1
Input capacitance ($\overline{CE}$, $\overline{WE}$, $\overline{OE}$)	C_{I2}	—	20	pF	1
Input capacitance ($\overline{RE}$)	C_{I3}	—	71	pF	1
Output capacitance (DQ)	$C_{I/O}$	—	20	pF	1, 2

Notes: 1. Capacitance measured with Boonton Meter or effective capacitance measuring method.
2. $\overline{CAS}$ = V_{IH} to disable Dout.

AC Characteristics (Ta = 0 to 70°C, V_{CC} = 3.3 V, +0.3, –0.15 V, V_{SS} = 0 V)[*1, *2, *18, *19]

- Input rise and fall times: 2 ns
- Input levels: 0 V, 3.0 V
- Input timing reference levels: 0.8 V, 2.0 V
- Output timing reference levels: 0.8 V, 2.0 V
- Output load: 1 TTL gate + C_L (100 pF) (Including scope and jig)

Read, Write, Read-Modify-Write and Refresh Cycles (Common parameters)

		HB56SW864ES							
		-6B		-7B		-8B			
Parameter	**Symbol**	**Min**	**Max**	**Min**	**Max**	**Min**	**Max**	**Unit**	**Notes**
Random read or write cycle time	t_{RC}	104	—	124	—	144	—	ns	
$\overline{RAS}$ precharge time	t_{RP}	40	—	50	—	60	—	ns	
$\overline{CAS}$ precharge time	t_{CP}	10	—	13	—	15	—	ns	
$\overline{RAS}$ pulse width	t_{RAS}	60	10000	70	10000	80	10000	ns	
$\overline{CAS}$ pulse width	t_{CAS}	10	10000	13	10000	15	10000	ns	
Row address setup time	t_{ASR}	0	—	0	—	0	—	ns	
Row address hold time	t_{RAH}	10	—	10	—	10	—	ns	
Column address setup time	t_{ASC}	0	—	0	—	0	—	ns	
Column address hold time	t_{CAH}	10	—	13	—	15	—	ns	
$\overline{RAS}$ to $\overline{CAS}$ delay time	t_{RCD}	20	40	20	47	20	55	ns	3
$\overline{RAS}$ to column address delay time	t_{RAD}	15	25	15	30	15	35	ns	4
$\overline{RAS}$ hold time	t_{RSH}	20	—	23	—	25	—	ns	
$\overline{CAS}$ hold time	t_{CSH}	48	—	58	—	68	—	ns	
$\overline{CAS}$ to $\overline{RAS}$ precharge time	t_{CRP}	10	—	10	—	10	—	ns	
$\overline{OE}$ to Din delay time	t_{OED}	20	—	23	—	25	—	ns	5
$\overline{OE}$ delay time from Din	t_{DZO}	0	—	0	—	0	—	ns	6
$\overline{CAS}$ delay time from Din	t_{DZC}	0	—	0	—	0	—	ns	6
Transition time (rise and fall)	t_T	2	50	2	50	2	50	ns	7
Refresh period	t_{REF}	—	64	—	64	—	64	ms	

Read Cycle

		HB56SW864ES							
		-6B		-7B		-8B			
Parameter	**Symbol**	**Min**	**Max**	**Min**	**Max**	**Min**	**Max**	**Unit**	**Notes**
Access time from $\overline{RAS}$	t_{RAC}	—	60	—	70	—	80	ns	8, 9
Access time from $\overline{CAS}$	t_{CAC}	—	20	—	23	—	25	ns	9, 10, 17
Access time from address	t_{AA}	—	35	—	40	—	45	ns	9, 11, 17
Access time from $\overline{OE}$	t_{OEA}	—	20	—	23	—	25	ns	9, 21
Read command setup time	t_{RCS}	0	—	0	—	0	—	ns	
Read command hold time to $\overline{CAS}$	t_{RCH}	0	—	0	—	0	—	ns	12
Read command hold time from $\overline{RAS}$	t_{RCHR}	60	—	70	—	80	—	ns	
Read command hold time to $\overline{RAS}$	t_{RRH}	0	—	0	—	0	—	ns	12
Column address to $\overline{RAS}$ lead time	t_{RAL}	35	—	40	—	45	—	ns	
Column address to $\overline{CAS}$ lead time	t_{CAL}	18	—	23	—	28	—	ns	
$\overline{CAS}$ to output in low-Z	t_{CLZ}	2	—	2	—	2	—	ns	
Output data hold time	t_{OH}	3	—	3	—	3	—	ns	
Output data hold time from $\overline{OE}$	t_{OHO}	3	—	3	—	3	—	ns	
Output buffer turn-off time	t_{OFF}	—	20	—	20	—	20	ns	13
Output buffer turn-off to $\overline{OE}$	t_{OEZ}	—	20	—	20	—	20	ns	13
$\overline{CAS}$ to Din delay time	t_{CDD}	20	—	23	—	25	—	ns	5
Output data hold time from $\overline{RAS}$	t_{OHR}	3	—	3	—	3	—	ns	
Output buffer turn-off time to $\overline{RAS}$	t_{OFR}	—	15	—	15	—	15	ns	
Output buffer turn-off to $\overline{WE}$	t_{WEZ}	—	20	—	20	—	20	ns	
$\overline{WE}$ to Din delay time	t_{WED}	20	—	23	—	25	—	ns	
$\overline{RAS}$ to Din delay time	t_{RDD}	15	—	18	—	20	—	ns	

Write Cycle

		HB56SW864ES							
		-6B		-7B		-8B			
Parameter	Symbol	Min	Max	Min	Max	Min	Max	Unit	Notes
Write command setup time	t_{WCS}	0	—	0	—	0	—	ns	14
Write command hold time	t_{WCH}	10	—	13	—	15	—	ns	
Write command pulse width	t_{WP}	10	—	10	—	10	—	ns	
Write command to $\overline{RAS}$ lead time	t_{RWL}	15	—	18	—	20	—	ns	
Write command to $\overline{CAS}$ lead time	t_{CWL}	10	—	13	—	15	—	ns	
Data-in setup time	t_{DS}	0	—	0	—	0	—	ns	15
Data-in hold time	t_{DH}	15	—	18	—	20	—	ns	15

Read-Modify-Write Cycle

		HB56SW864ES							
		-6B		-7B		-8B			
Parameter	Symbol	Min	Max	Min	Max	Min	Max	Unit	Notes
Read-modify-write cycle time	t_{RWC}	149	—	175	—	199	—	ns	
$\overline{RAS}$ to $\overline{WE}$ delay time	t_{RWD}	87	—	100	—	112	—	ns	14
$\overline{CAS}$ to $\overline{WE}$ delay time	t_{CWD}	37	—	43	—	47	—	ns	14
Column address to $\overline{WE}$ delay time	t_{AWD}	52	—	60	—	67	—	ns	14
$\overline{OE}$ hold time from $\overline{WE}$	t_{OEH}	15	—	18	—	20	—	ns	

Refresh Cycle

		HB56SW864ES							
		-6B		-7B		-8B			
Parameter	Symbol	Min	Max	Min	Max	Min	Max	Unit	Notes
$\overline{CAS}$ setup time (CBR refresh cycle)	t_{CSR}	10	—	10	—	10	—	ns	
$\overline{CAS}$ hold time (CBR refresh cycle)	t_{CHR}	10	—	10	—	10	—	ns	
$\overline{WE}$ setup time (CBR refresh cycle)	t_{WRP}	5	—	5	—	5	—	ns	
$\overline{WE}$ hold time (CBR refresh cycle)	t_{WRH}	10	—	10	—	10	—	ns	
$\overline{RAS}$ precharge to $\overline{CAS}$ hold time	t_{RPC}	0	—	0	—	0	—	ns	

EDO Page Mode Cycle

		HB56SW864ES							
		-6B		-7B		-8B			
Parameter	Symbol	Min	Max	Min	Max	Min	Max	Unit	Notes
EDO page mode cycle time	t_{HPC}	25	—	30	—	35	—	ns	20
EDO page mode $\overline{RAS}$ pulse width	t_{RASP}	—	100000	—	100000	—	100000	ns	16
Access time from $\overline{CAS}$ precharge	t_{CPA}	—	40	—	45	—	50	ns	9, 17
$\overline{RAS}$ hold time from $\overline{CAS}$ precharge	t_{CPRH}	40	—	45	—	50	—	ns	
Output data hold time from $\overline{CAS}$ low	t_{DOH}	3	—	3	—	3	—	ns	9, 17
$\overline{CAS}$ hold time referred $\overline{OE}$	t_{COL}	10	—	13	—	15	—	ns	
$\overline{CAS}$ to $\overline{OE}$ setup time	t_{COP}	5	—	5	—	5	—	ns	
Read command hold time from $\overline{CAS}$ precharge	t_{RCHC}	35	—	40	—	45	—	ns	

EDO Page Mode Read-Modify-Write Cycle

		HB56SW864ES							
		-6B		-7B		-8B			
Parameter	Symbol	Min	Max	Min	Max	Min	Max	Unit	Notes
EDO page mode read-modify-write cycle time	t_{HPRWC}	79	—	90	—	99	—	ns	
$\overline{WE}$ delay time from $\overline{CAS}$ precharge	t_{CPW}	54	—	62	—	69	—	ns	14

Notes:
1. AC measurements assume t_T = 2 ns.
2. An initial pause of 200 µs is required after power up followed by a minimum of eight initialization cycles (any combination of cycles containing $\overline{RAS}$-only refresh cycle or $\overline{CAS}$-before-$\overline{RAS}$ refresh).
3. Operation with the t_{RCD} (max) limit insures that t_{RAC} (max) can be met, t_{RCD} (max) is specified as a reference point only; if $t_{RCD} \geq t_{RCD}$ (max) +t_{AA} (max) – t_{CAC} (max), then access time is controlled exclusively by t_{CAC}.
4. Operation with the t_{RAD} (max) limit insures that t_{RAC} (max) can be met, t_{RAD} (max) is specified as a reference point only; if t_{RAD} is greater than the specified t_{RAD} (max) limit, then access time is controlled exclusively by t_{AA}.
5. Either t_{OED} or t_{CDD} must be satisfied.
6. Either t_{DZO} or t_{DZC} must be satisfied.
7. V_{IH} (min) and V_{IL} (max) are reference levels for measuring timing of input signals. Also, transition times are measured between V_{IH} (min) and V_{IL} (max).
8. Assumes that $t_{RCD} \leq t_{RCD}$ (max) and $t_{RAD} \leq t_{RAD}$ (max). If t_{RCD} or t_{RAD} is greater than the maximum recommended value shown in this table, t_{RAC} exceeds the value shown.
9. Measured with a load circuit equivalent to 1TTL loads and 100 pF.
10. Assumes that $t_{RCD} \geq t_{RCD}$ (max) and $t_{RCD} + t_{CAC}$ (max) $\geq t_{RAD} + t_{AA}$ (max).
11. Assumes that $t_{RAD} \geq t_{RAD}$ (max) and $t_{RCD} + t_{CAC}$ (max) $\leq t_{RAD} + t_{AA}$ (max).
12. Either t_{RCH} or t_{RRH} must be satisfied for a read cycles.
13. t_{OFF} (max) and t_{OEZ} (max) define the time at which the outputs achieve the open circuit condition and are not referred to output voltage levels.
14. t_{WCS}, t_{RWD}, t_{CWD}, t_{AWD} and t_{CPW} are not restrictive operating parameters. They are included in the data sheet as electrical characteristics only; if $t_{WCS} \geq t_{WCS}$ (min), the cycle is an early write cycle and the data out pin will remain open circuit (high impedance) throughout the entire cycle; if $t_{RWD} \geq t_{RWD}$ (min), $t_{CWD} \geq t_{CWD}$ (min), and $t_{AWD} \geq t_{AWD}$ (min) or $t_{CWD} \geq t_{CWD}$ (min), $t_{AWD} \geq t_{AWD}$ (min) and $t_{CPW} \geq t_{CPW}$ (min), the cycle is a read-modify-write and the data output will contain data read from the selected cell; if neither of the above sets of conditions is satisfied, the condition of the data out (at access time) is indeterminate.
15. These parameters are referred to $\overline{CAS}$ leading edge in early write cycles and to $\overline{WE}$ leading edge in delayed write or read-modify-write cycles.
16. t_{RASP} defines $\overline{RAS}$ pulse width in EDO page mode cycles.
17. Access time is determined by the longest among t_{AA}, t_{CAC} and t_{CPA}.
18. In delayed write or read-modify-write cycles, $\overline{OE}$ must disable output buffer prior to applying data to the device. After $\overline{RAS}$ is reset, if $t_{OEH} \geq t_{CWL}$, the DQ pin will remain open circuit (high impedance); if $t_{OEH} < t_{CWL}$, invalid data will be out at each DQ.
19. All the V_{CC} and V_{SS} pins shall be supplied with the same voltages.
20. t_{HPC} (min) can be achieved during a series of EDO page mode write cycles or EDO page mode read cycles. If both write and read operation are mixed in a EDO page mode $\overline{RAS}$ cycle (EDO page mode mix cycle (1), (2)), minimum value of $\overline{CAS}$ cycle ($t_{CAS} + t_{CP} + 2t_T$) becomes greater than the specified t_{HPC} (min) value. The value of $\overline{CAS}$ cycle time of mixed EDO page mode is shown in EDO page mode mix cycle (1) and (2).
21. When output buffers are enabled once, sustain the low impedance state until valid data is obtained. When output buffer is turned on and off within a very short time, generally it causes large V_{CC} / V_{SS} line noise, which causes to degrade V_{IH} min / V_{IL} max level.

Timing Waveforms

Notes: //////: H or L (H: V_{IH} (min) ≤ V_{IN} ≤ V_{IH} (max), L: V_{IL} (min) ≤ V_{IN} ≤ V_{IL} (max))

XXX: Invalid Dout

Read Cycle

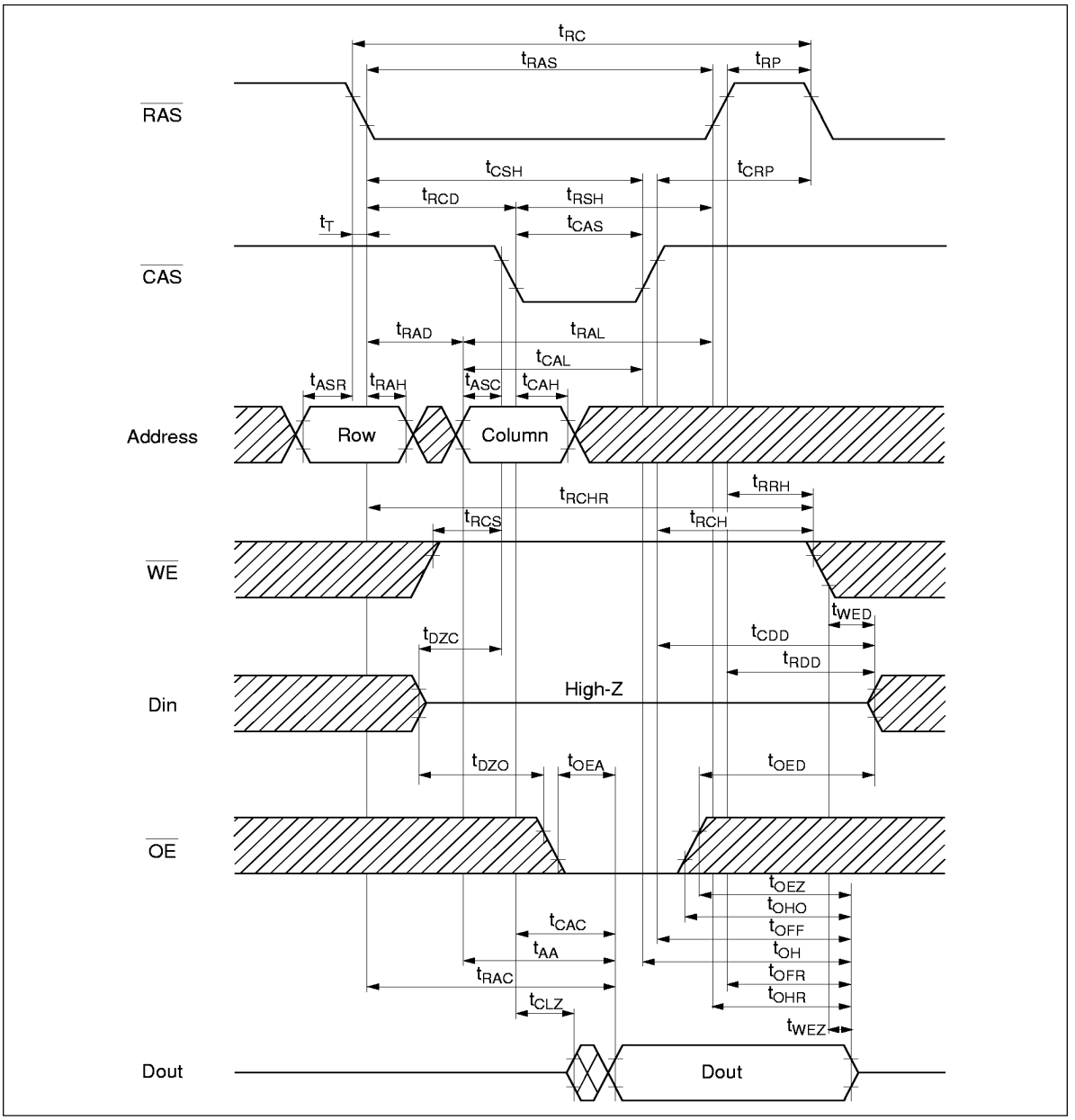

Early Write Cycle

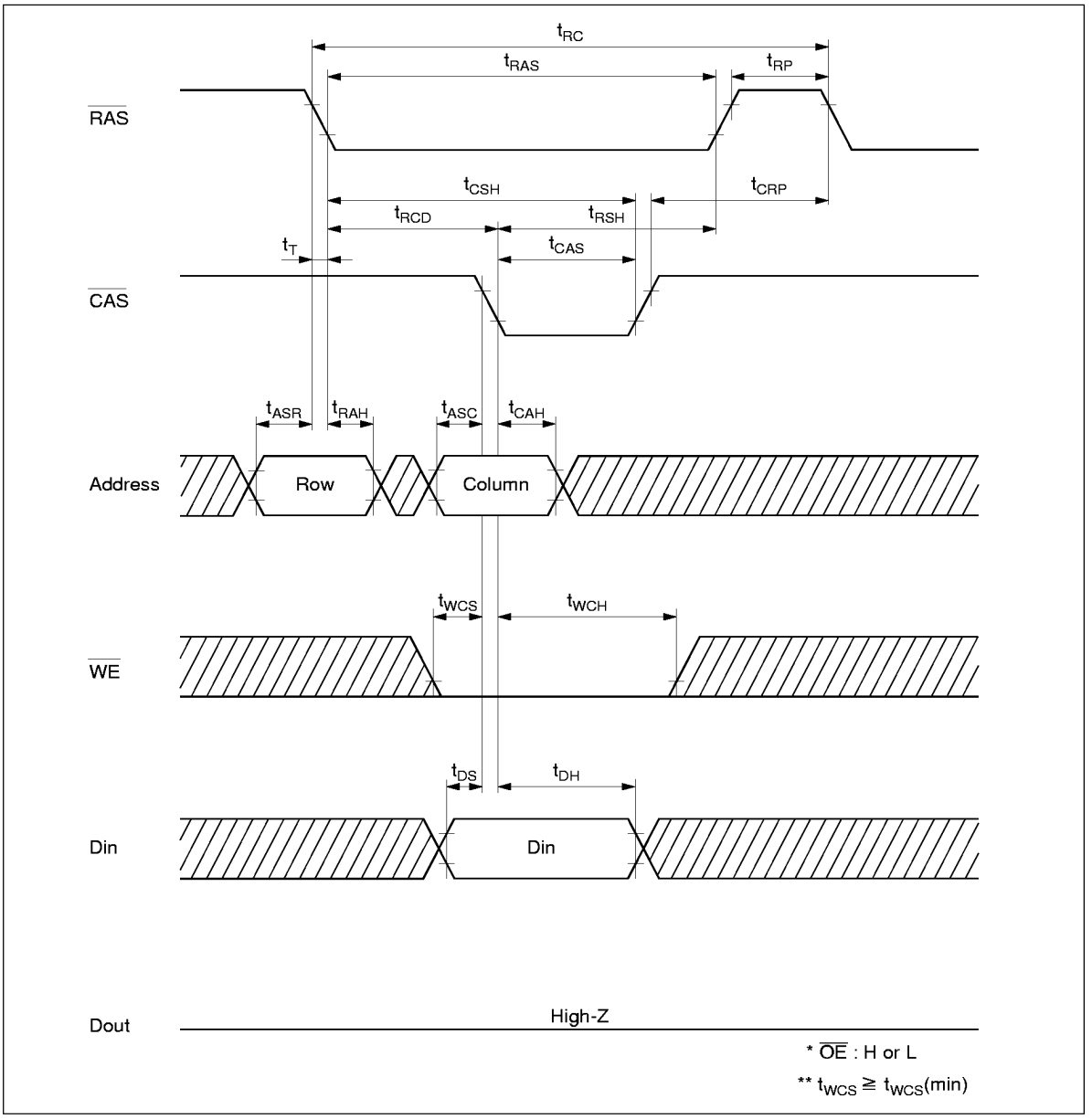

Delayed Write Cycle

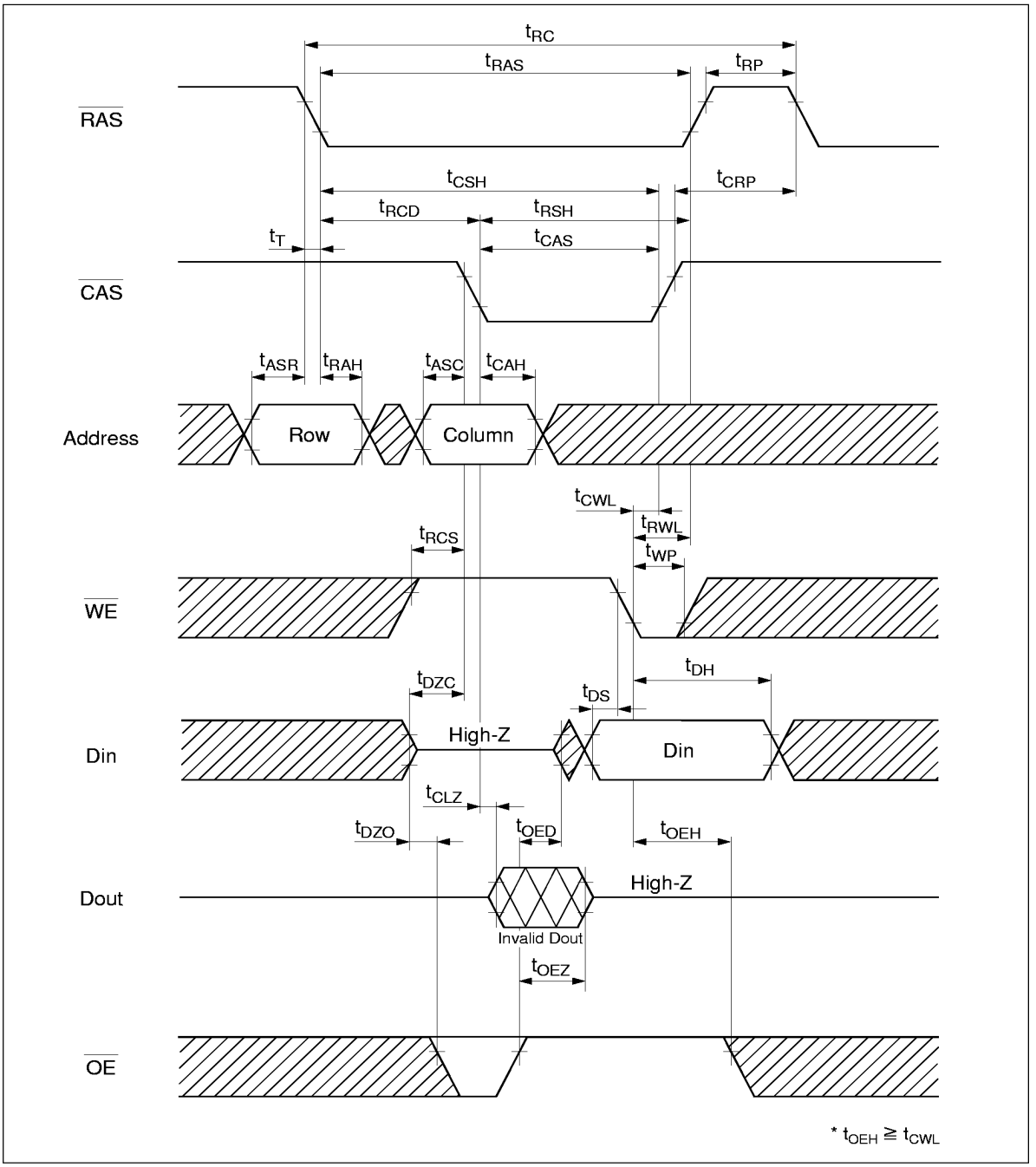

Read-Modify-Write Cycle

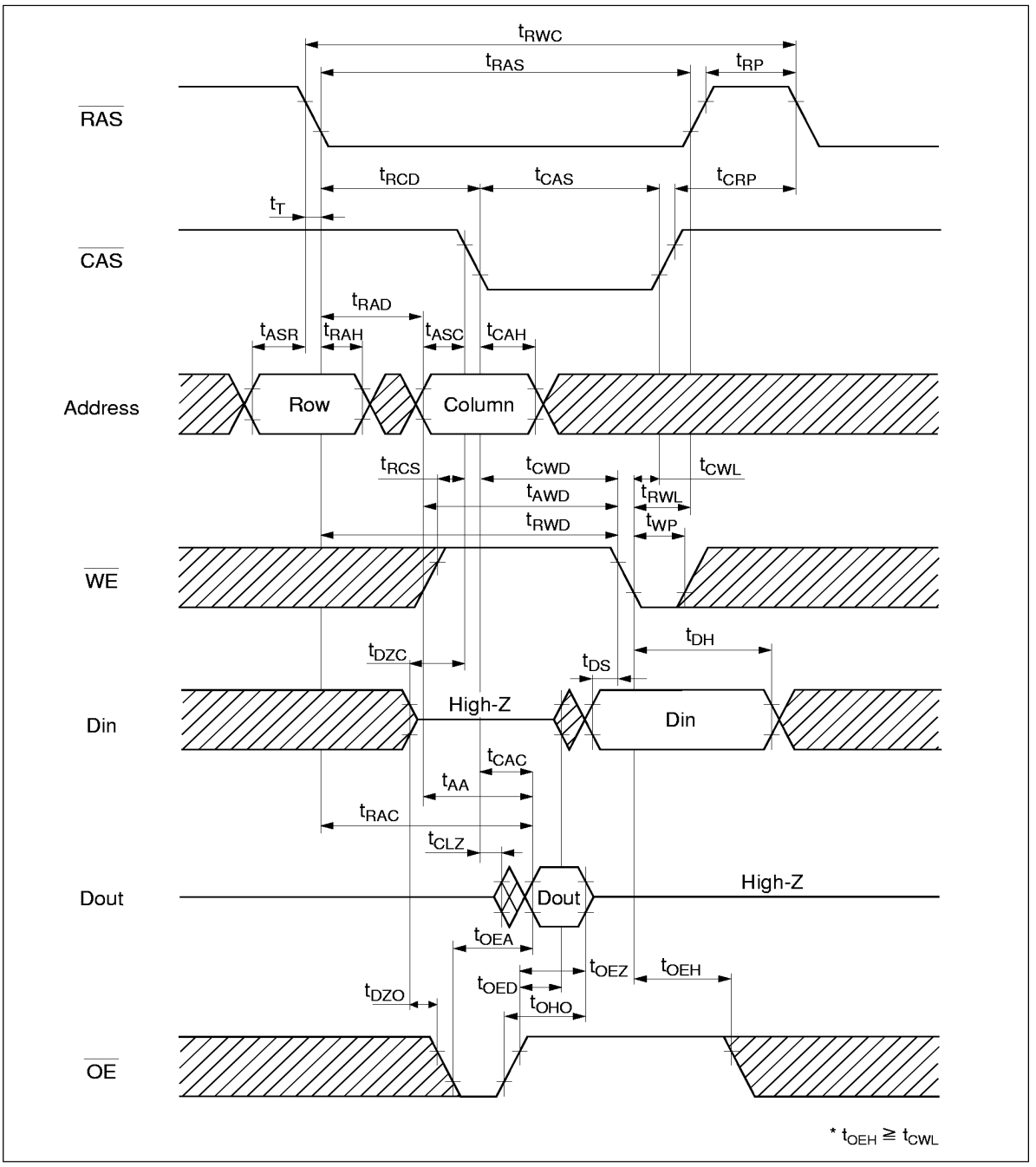

$\overline{RAS}$-Only Refresh Cycle

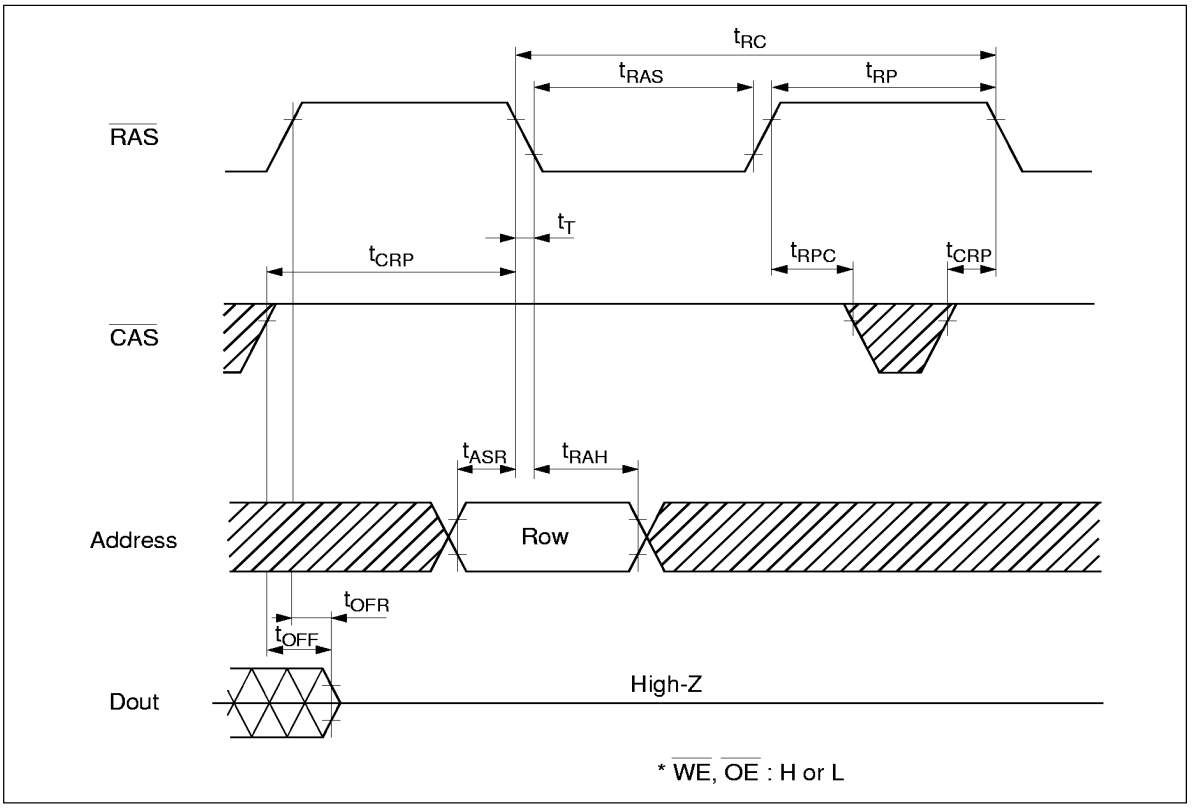

$\overline{CAS}$-Before-$\overline{RAS}$ Refresh Cycle

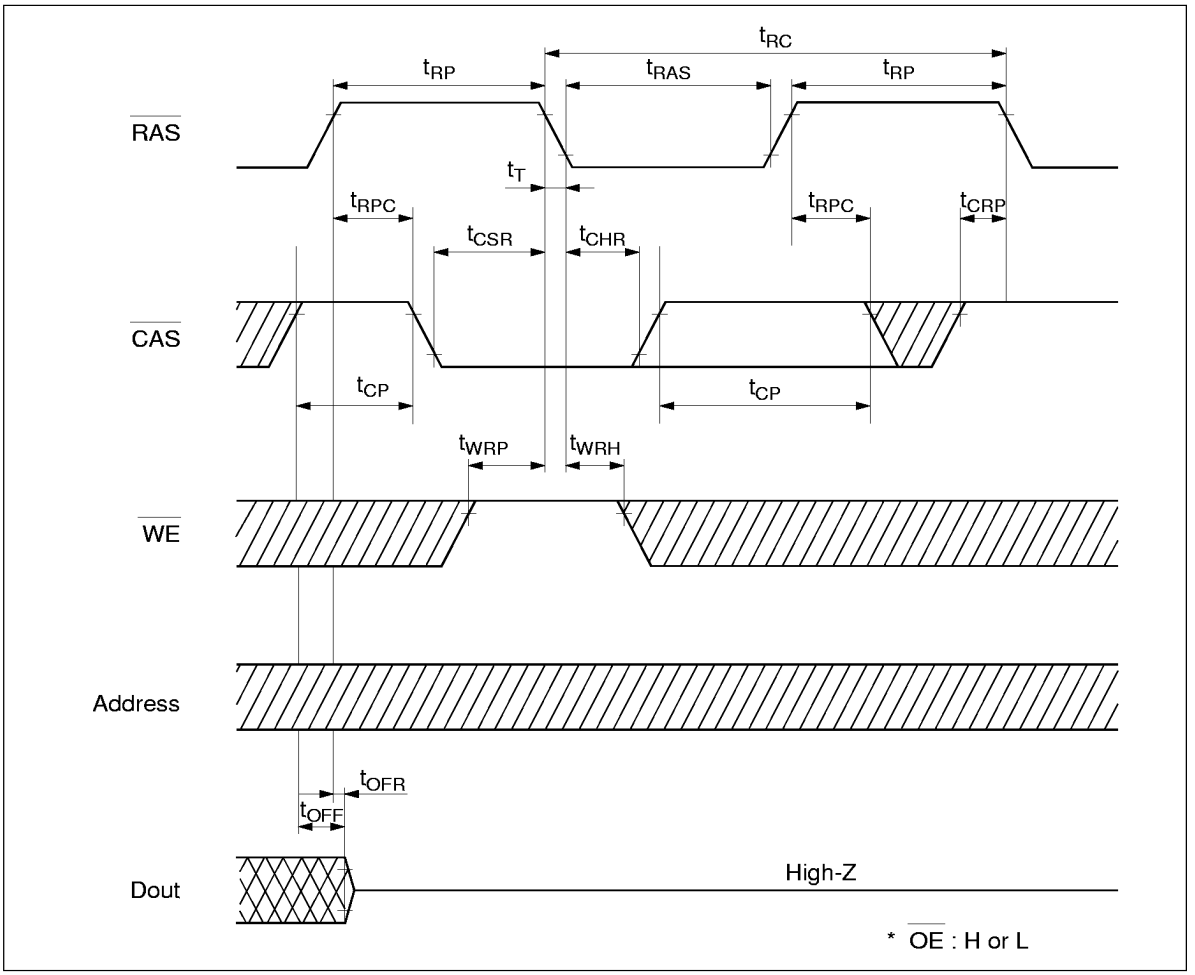

EDO Page Mode Read Cycle

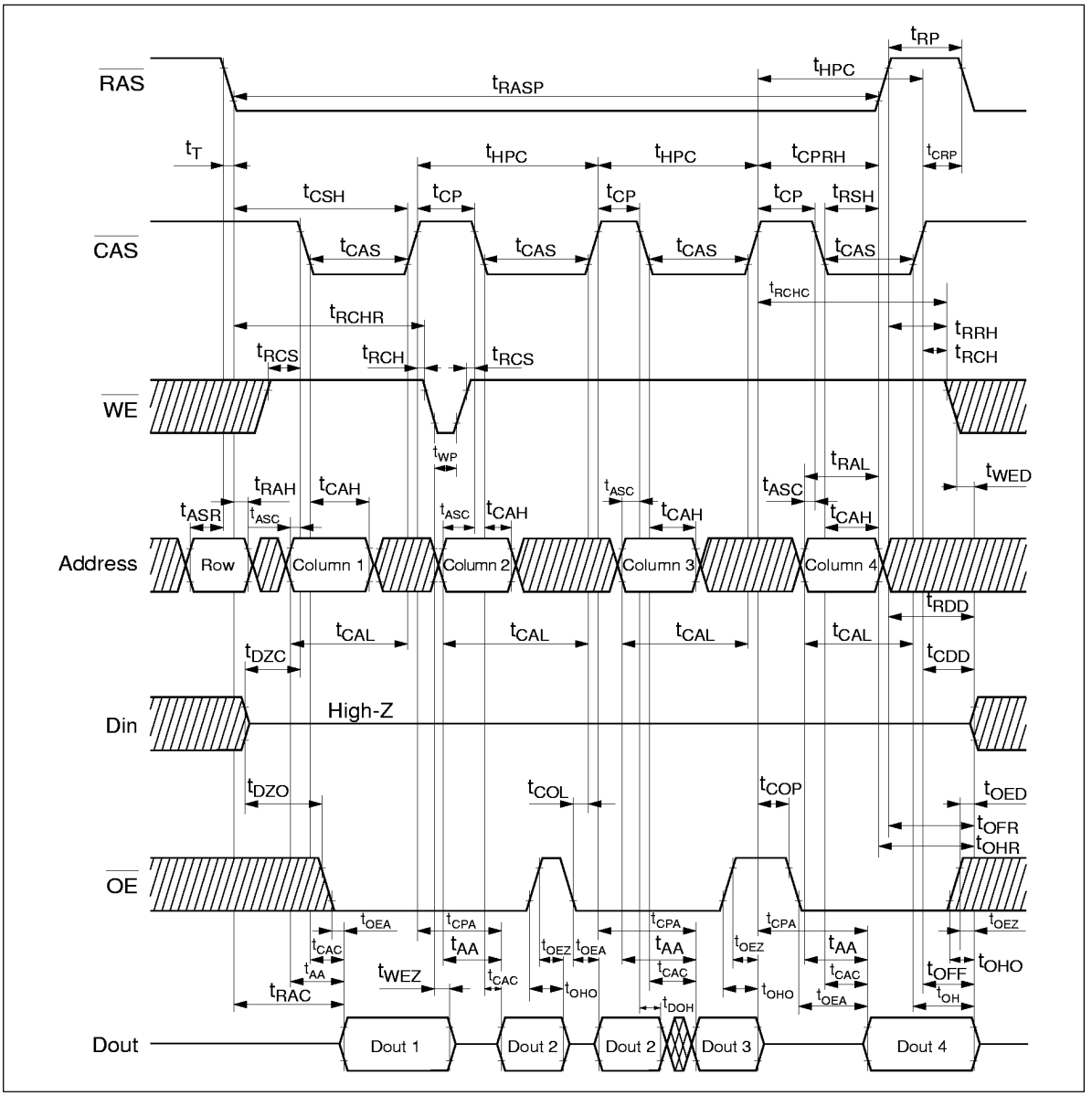

EDO Page Mode Early Write Cycle

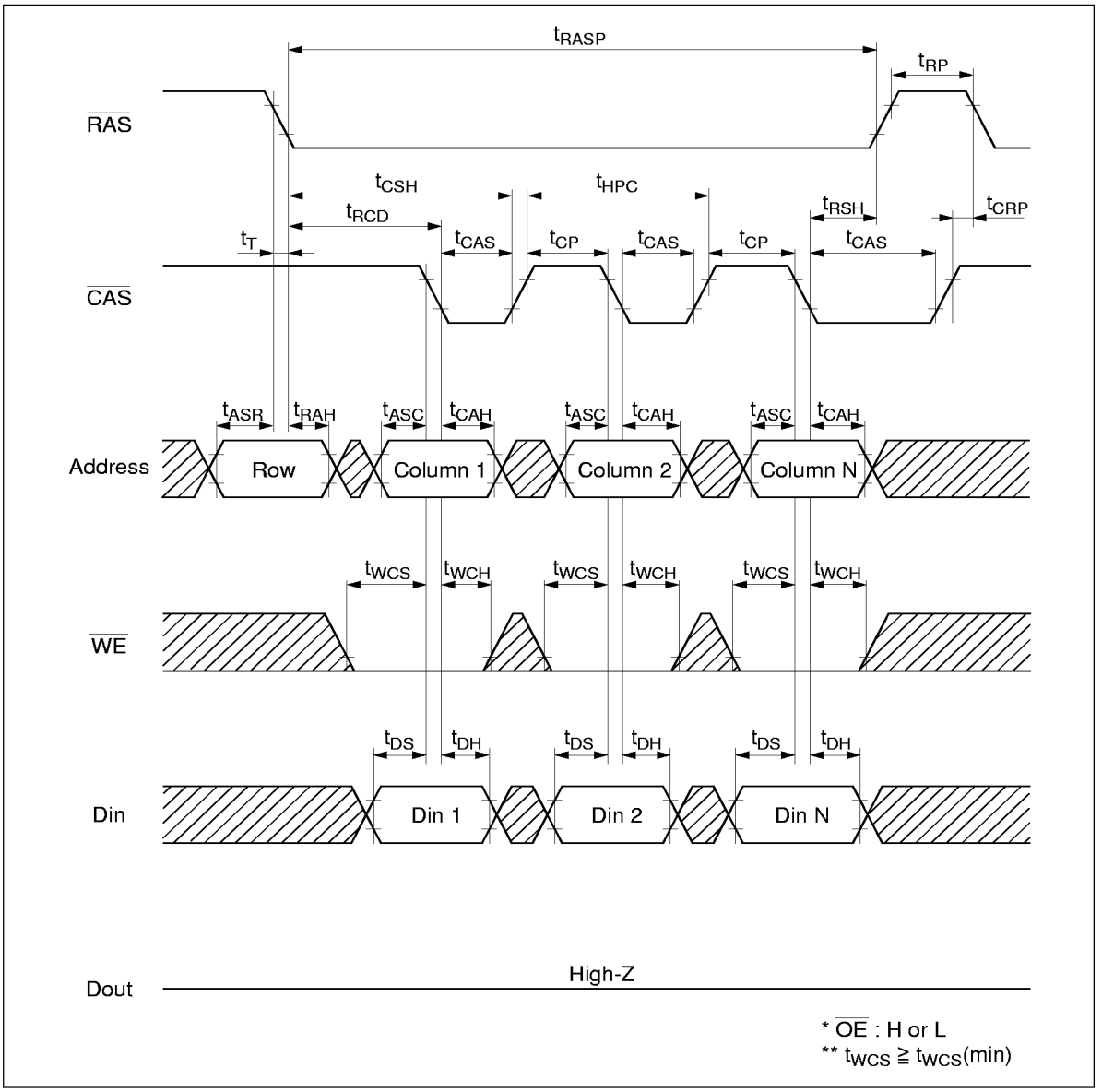

EDO Page Mode Delayed Write Cycle

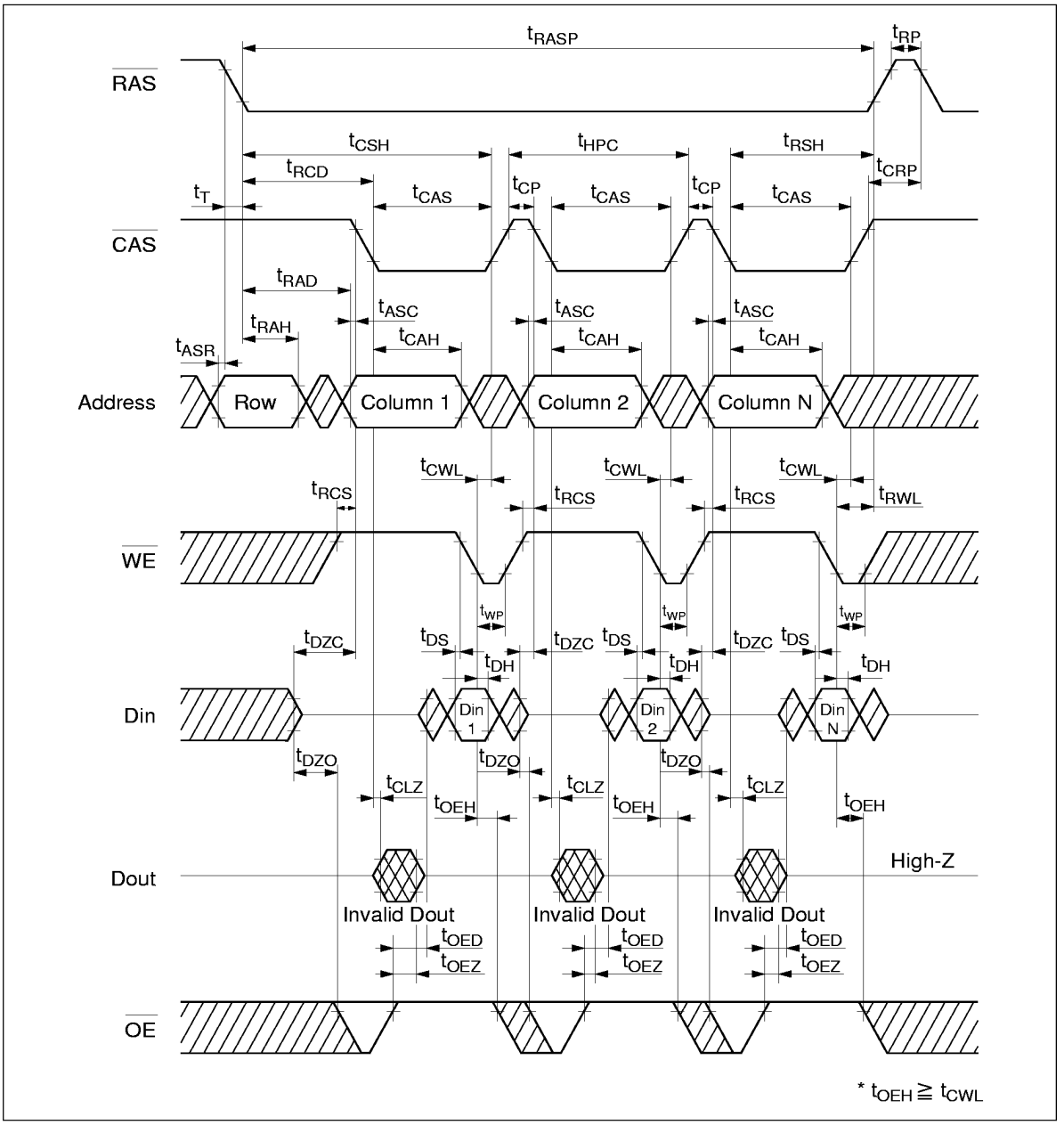

EDO Page Mode Read-Modify-Write Cycle

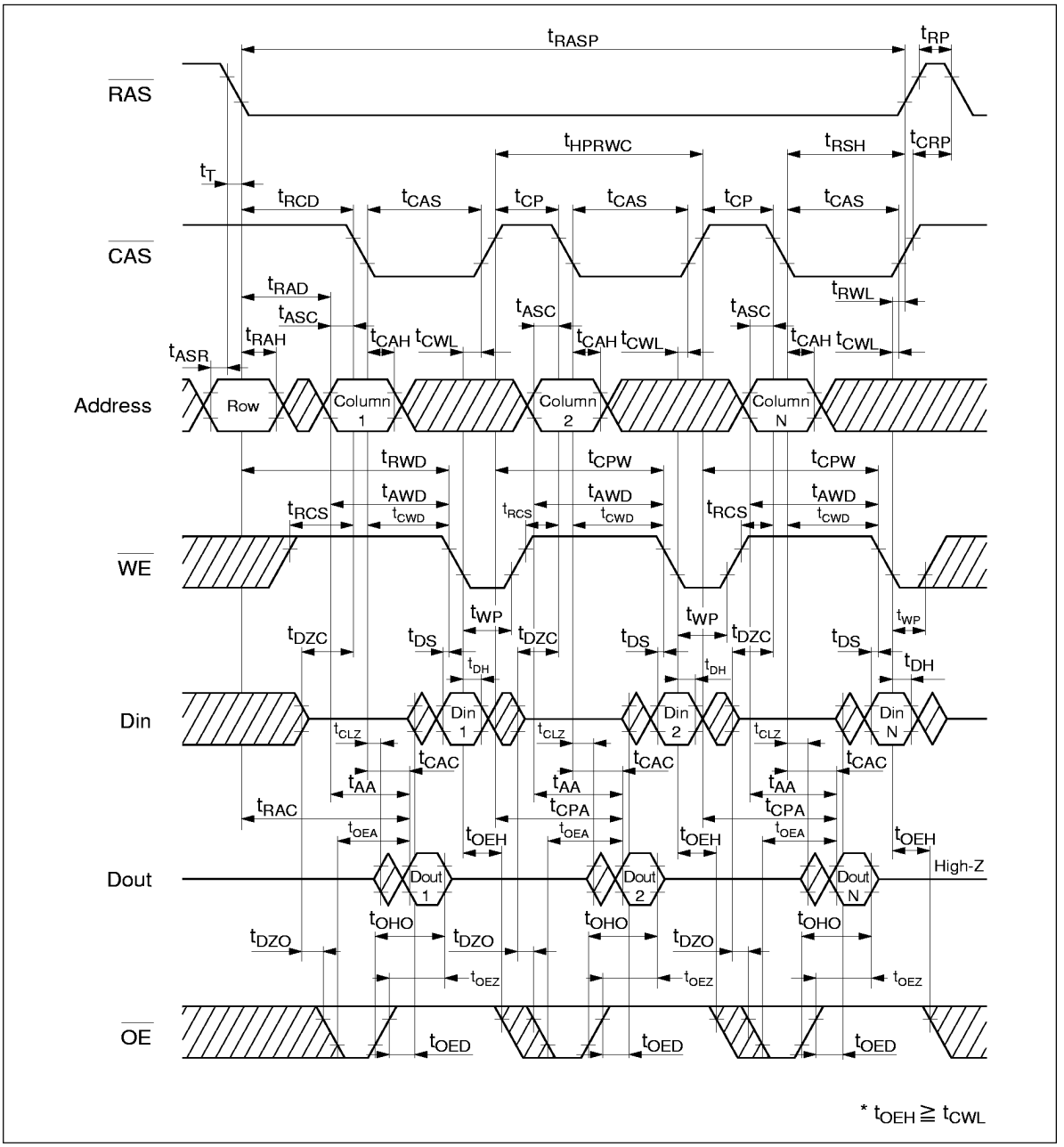

EDO Page Mode Mix Cycle (1)

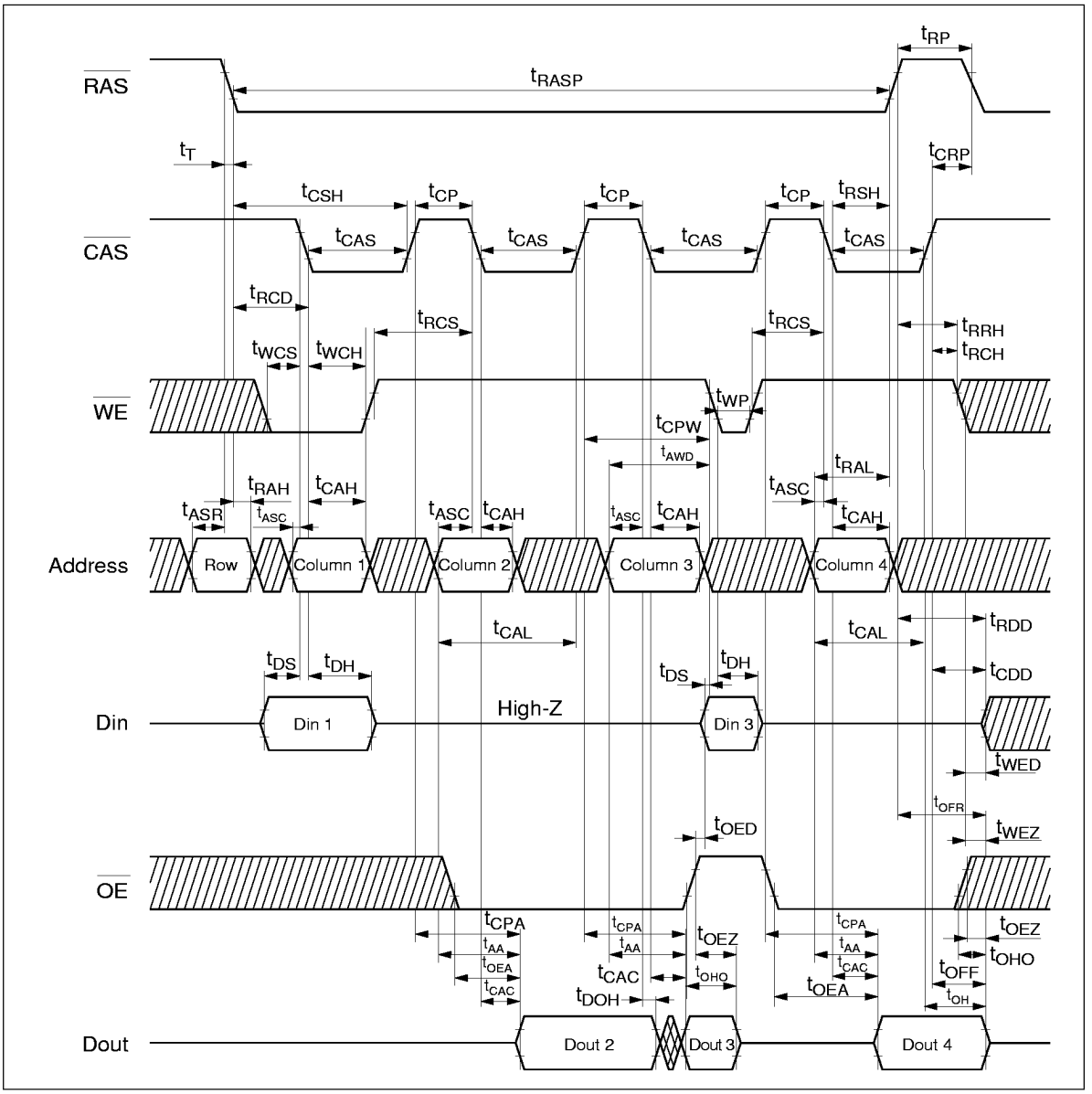

EDO Page Mode Mix Cycle (2)

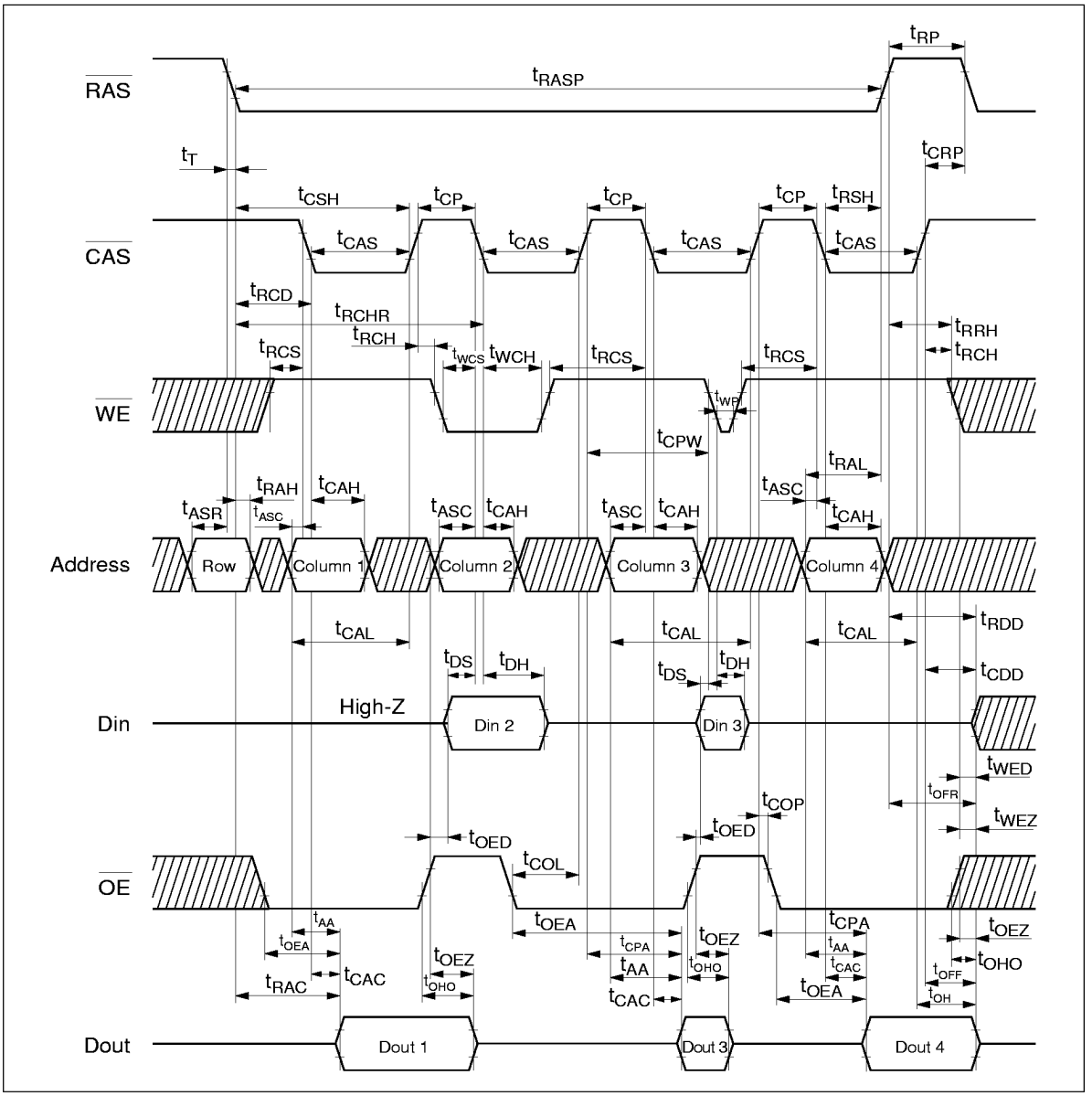
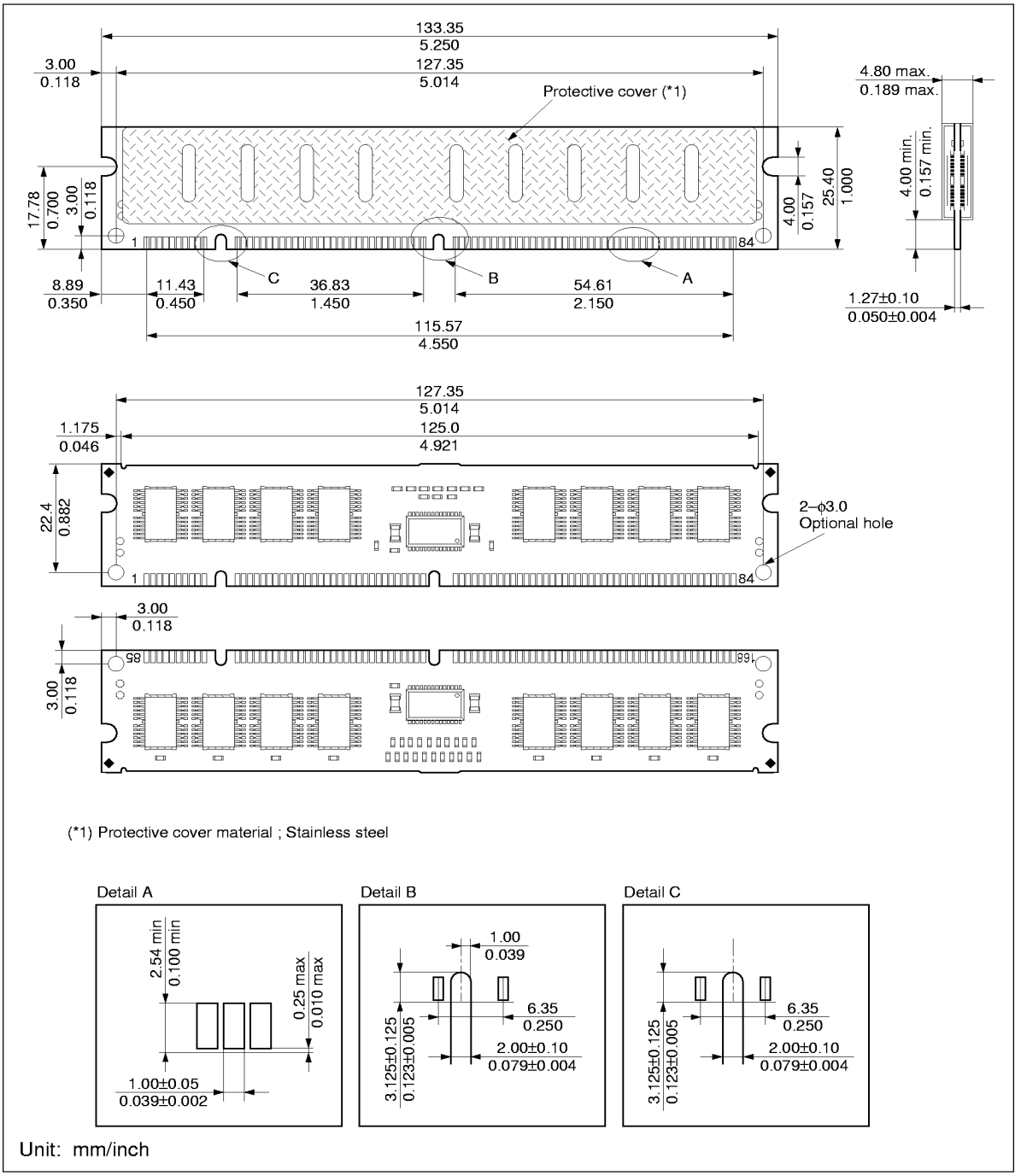
Physical Outline