5 Watt Low-Noise DC-DC Converters/ *DCE Single and Dual Output*

SINGLE
INPUT: 5, 12, 24, 28, 48 VDC
OUTPUT: 5, 12, 15 VDC

DUAL
INPUT: 5, 12, 24, 28, 48 VDC
OUTPUT: ±12, ±15 VDC

- Small 2" Square Package
- Short Circuit Protection 130% of Rated Load
- High Input/Output Isolation
- Excellent Regulation
- 6-Sided Continuous Shielding

These self-contained converters provide solutions to floating power requirements in analog and digital applications where low ripple and noise are important.

Due to high isolation resistance, all outputs are floating, and may be referenced either positive or negative, or series-stacked for higher output voltage.

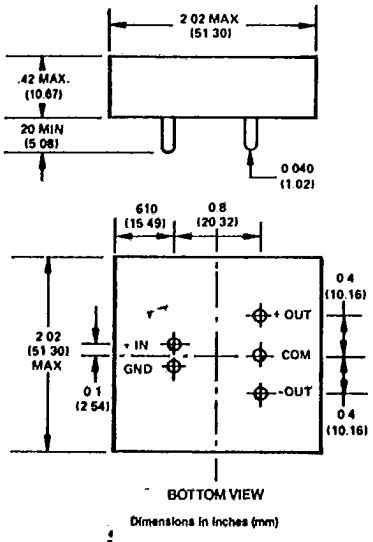

Dimensions in inches (mm)

SINGLE OUTPUTS

Specifications Typical at +25°C — MODELS

DCE	5/5S/1000 5/12S/450 5/15S/350	12/5S/1000 12/12S/500 12/15S/350	24/5S/1000 24/12S/500 24/15S/350	28/5S/1000 28/12S/500 28/15S/350	48/5S/1000 48/12S/500 48/15S/350
Input Voltage Tolerance	5, ± .25VDC	12, ± .8VDC	24, + 2.4VDC −1.7VDC	28, + 2.8VDC −2VDC	48, + 4.8VDC −3.4VDC
Input Current No Load Full Load	170mA 1500mA	50mA 650mA	30mA 330mA	20mA 300mA	20mA 175mA
Input/Output Isolation	500 VDC $10^9\ \Omega$ ‖ 100pF				
Output Voltage/Current	+ 5 VDC @ 1000 mA + 12 VDC @ 500 mA + 15 VDC @ 350 mA				
Output Voltage Tolerance	± 1%				
Output Ripple	1mV rms				
Reflected Input Ripple Current (mA p-p)	35	30	30	25	15
Regulation Line/Load vs. Temperature	.1%/.1% .02%/°C				
Efficiency	70%				
Temperature Range Operating Storage	−25°C to + 71°C −40°C to + 100°C				
Case Material	Metal				
Mating Socket	S102				
Weight	3.5 oz.				

Note: Single available in Package "A" only with Common Pin removed.

DUAL OUTPUTS

Specifications Typical at +25°C — MODELS

DCE	5/12/150 5/15/150	12/12/150 12/15/150	24/12/150 24/15/150	28/12/150 28/15/150	48/12/150 48/15/150
Input Voltage Tolerance	5, ± .25VDC	12, ± .8VDC	24, + 2.4VDC −1.7VDC	28, + 2.8VDC −2VDC	48, + 4.8VDC −3.4VDC
Input Current No Load Full Load	150mA 1600mA	50mA 680mA	25mA 315mA	20mA 280mA	10mA 175mA
Input/Output Isolation	500 VDC $10^9\ \Omega$ ‖ 100pF				
Output Voltage/Current	± 12 VDC @ ± 150 mA ± 15 VDC @ ± 150 mA				
Output Voltage Tolerance Balance	± 1% ± 0.5%				
Output Ripple	1mV rms				
Reflected Input Ripple Current (mA p-p)	40	20	20	20	10
Regulation Line/Load vs. Temperature	.02%/.02% .02%/°C				
Efficiency	70%				
Temperature Range Operating Storage	−25°C to 71°C −40°C to 100°C				
Case Material	Metal				
Mating Socket	S121				
Weight	3.5 oz.				

Option A: Conventional 5-pin (0.40 dia.) termination (Use S102 Socket)

intronics 150 Dan Road, Canton, Massachusetts 02021 • Tel: 617-828-4992 • Fax: 617-828-5050

Powered by ICminer.com Electronic-Library Service CopyRight 2003