THIS DRAWING IS UNPUBLISHED. RELEASED FOR PUBLICATION 20
© COPYRIGHT 20 BY TYCO ELECTRONICS CORPORATION. ALL RIGHTS RESERVED.

LOC	DIST
FT	0

REVISIONS

P	LTR	DESCRIPTION	DATE	DWN	APVD
	C	REVISED PER 0G3B-0608-00	15MAR2001	EZ	DB
	D	REVISED PER 0G3B-0119-01	17AUG2001	EZ	DB

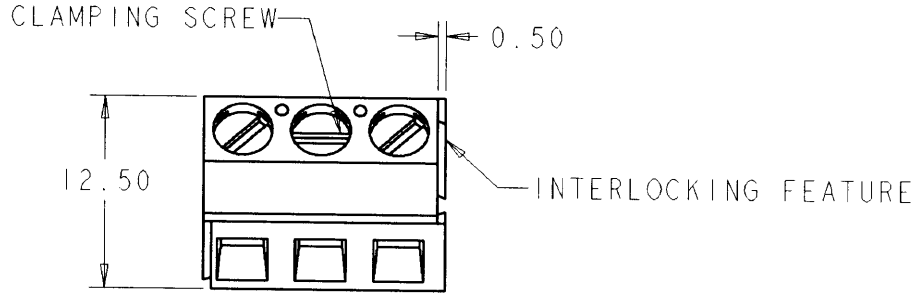

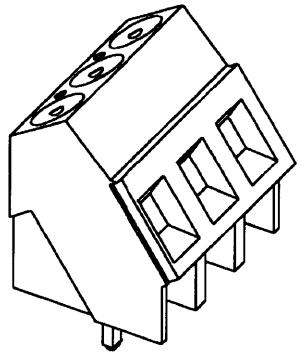

-3 AS SHOWN

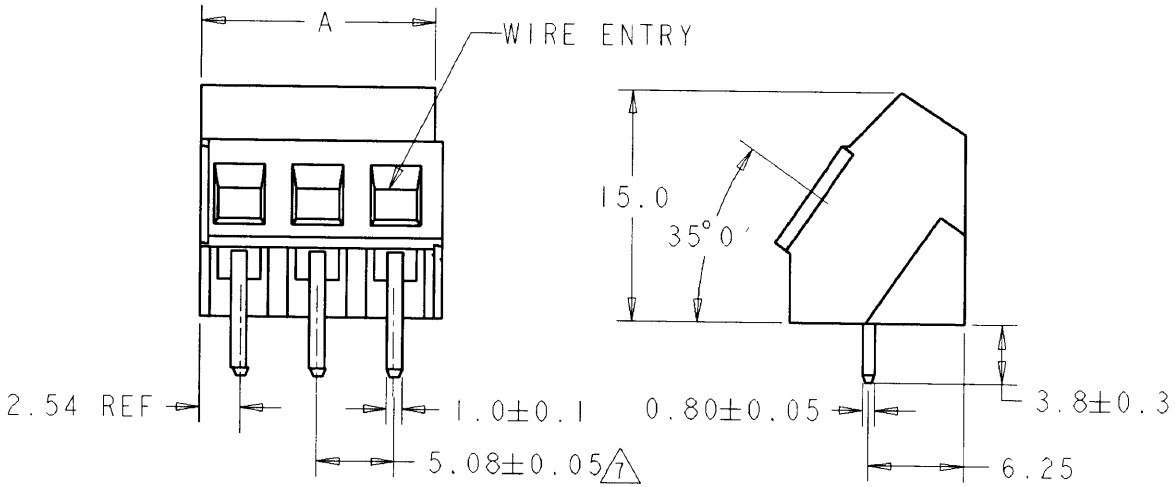

DIM. A	MARKING 8	COMPOSITION	N°POS.	PART NUMBER
45.72	9 SEE SHEET 2	3+3+3 pos.	9	1-282847-4
66.04	9 SEE SHEET 2	2+2+3+3+3 pos.	13	1-282847-3
60.96		3+3+3+3 pos.	12	1-282847-2
55.88		3+3+3+2 pos.	11	1-282847-1
50.80		3+3+2+2 pos.	10	1-282847-0
45.72		3+3+3 pos.	9	282847-9
40.64		3+3+2 pos.	8	282847-8
35.56		3+2+2 pos.	7	282847-7
30.48		3+3 pos.	6	282847-6
25.40		3+2 pos.	5	282847-5
20.32		2+2 pos.	4	282847-4
15.24			3	282847-3
10.16			2	282847-2

RECOMMENDED PC BOARD LAYOUT

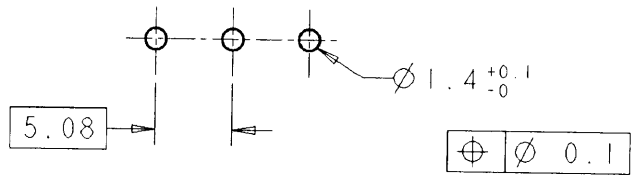

THIS DRAWING IS A CONTROLLED DOCUMENT FOR TYCO ELECTRONICS CORPORATION. IT IS SUBJECT TO CHANGE AND THE CONTROLLING ENGINEERING ORGANIZATION SHOULD BE CONTACTED FOR THE LATEST REVISION.

DIMENSIONS: mm

TOLERANCES UNLESS OTHERWISE SPECIFIED:
0 PLC ±-
1 PLC ±.3
2 PLC ±.25
3 PLC ±-
4 PLC ±-
ANGLES ±2

MATERIAL 1 -
FINISH 1 -

DWN	E. ZANOLINI	15MAR2001
CHK	D. BIEVENOUR	15MAR2001
APVD	D. BIEVENOUR	15MAR2001
PRODUCT SPEC	-	
APPLICATION SPEC	-	
WEIGHT	-	

BUCHANAN
Tyco Electronics
Harrisburg, PA 17105-3608

NAME: TERMINAL BLOCK, PCB MOUNT ANGLED ENTRY WIRE, STACKING W/ INTERLOCK, 5.08mm, PITCH

SIZE	CAGE CODE	DRAWING NO	RESTRICTED TO
A3	00779	C-282847	-

CUSTOMER DRAWING | SCALE 3:1 | SHEET 1 OF 2 | REV D

AMP 1470-19 REV 31MAR2000

Pro/ENGINEER DRAWING