599-293

PCB Keyswitches

Hinge type mechanical keyswitches with SPNO contacts. PCB mounting. Momentary action with short button travel and tactile feedback. Available with plain grey cap, or with red or green LED indicator.

Rating:	50 mA 24 Vdc
Minimum load:	1 mA @ 5 VDC
Contact resistance:	<20mΩ initial
Operating life:	>200,000 cycles
Static capacity:	1.5 pF maximum (1 MHz)
LED current:	If 20 mA maximum
Temperature range:	-25° to +75 °C

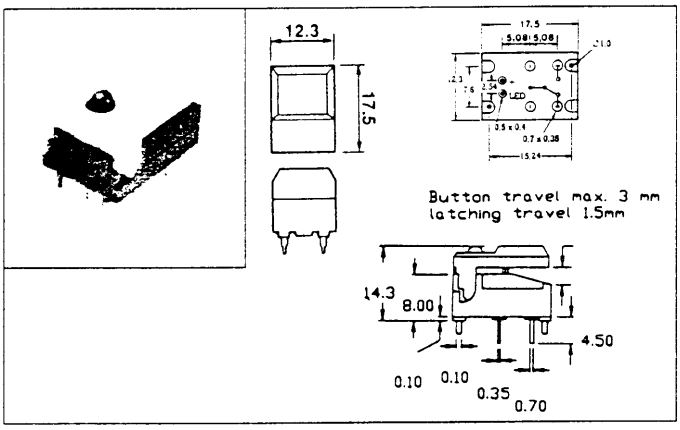

Order Code	Description
800-330	Keyswitch plain
800-331	Keyswitch with Red LED
800-333	Keyswitch with Green LED

Miniature PCB Keyboard Switches

PHILIPS

Low profile keyboard switches with single make momentary contact. Applications include logic switching. Contact is made via a spherical disc spring which clicks down to make contact, and snaps up when the actuating force is reduced.
Various colour caps are supplied separately.

Rating:	10 mA 30VDC
Contact resistance:	<1Ω
Operating force:	2-3 N

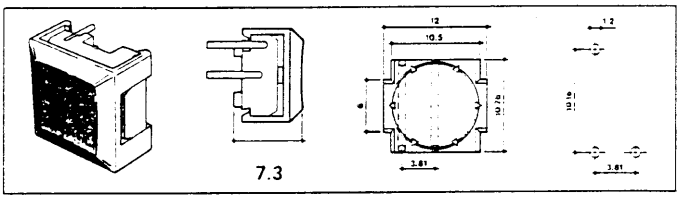

Order Code	Description
800-390	PCB Keyboard Switch
800-391	Black cap
800-392	White cap
800-393	Red cap
800-394	Blue cap

Slide Switches

PIC

A range of miniature, standard, and centre off DPDT slide switches.

	Miniature	Standard	Centre Off
Contact rating	0.25A 250VAC	0.5A 250VAC	0.5A 250VAC
Dimensions	15 x 8 x 7 mm	22 x 13 x 8 mm	22 x 13 x 8 mm
Fixing centres	19 mm	28 mm	28 mm

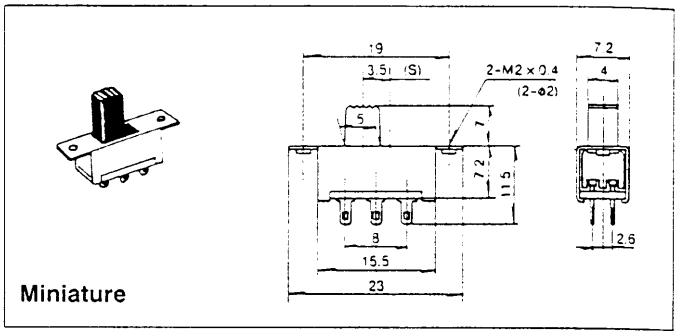

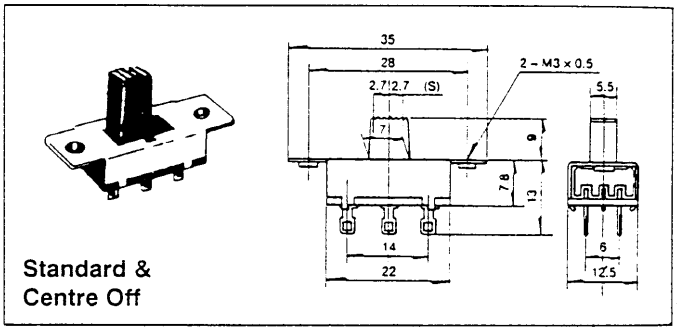

Order Code	Description
800-005	Miniature slide switch DPDT
800-006	Standard slide switch DPDT
800-007	Centre off slide switch DPDT

BETTER QUALITY
BETTER SERVICE
BETTER PRICES
BEST VALUE!

Tel 0582 410055 Fax 0582 458674