3mm Round
*micro*LED® *Optopipe*®
Optical Light Pipe, Bi-Level

Dialight

515-1094

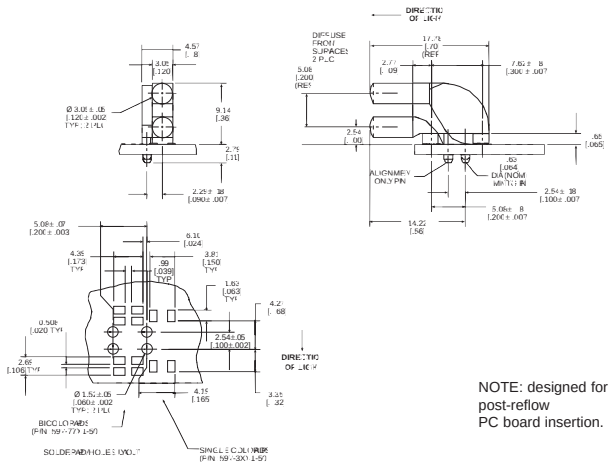

Dimensions in mm [inches]

www.DataSheet4U.com

Recommended MicroLED SMT LEDs for use with 515-1094

PART NO.	COLOR	PAGE #
597-3021-5xx	Red	1-30
597-3111-5xx	AlGaAs Red	1-30
597-3211-5xx	Orange	1-30
597-3301-5xx	Green	1-30
597-3401-5xx	Yellow	1-30
597-7701-5xx	Red/Green	1-31
597-7721-5xx	Yellow/Green	1-31

Features

- Can be mounted in arrays spaced .200 apart (min.)
- High transmissivity polycarbonate material
- UL94V-0 compliance
- ESD protection (circuit isolation from front panel)
- Wide viewing angle
- Arrays reduce insertion costs
- Allows bi-level SMT indicators
- Secures to PCB by press-fit

LED Data

For absolute maximum ratings and other electrical and optical data on the recommended LEDs, refer to LED data sheets.

Operating/Storage Temperature

–30°C to +100°C

Dialight *Optopipe*® Light Pipe Description

This Optopipe® is a standard design intended as a SMT compatible replacement for our 553 Series Circuit Board Indicators. The light outputs are spaced vertically .100" from the PCB to the first element, and then 0.200" between the top and bottom elements. We recommend a minimum of 0.200" between light pipes as a normal mounting pitch. This Optopipe® is held in place by 2 press-fit pins along the bottom of the device. The light pipe is not attached to the panel at any point but can protrude through holes in the panel. The gently arcing emitting end sticks through the plastic or metal panel. The light source is Dialight's 597 Series Type 1208 LED. The light pipe material is water clear transmissive polycarbonate rated UL94-V0, and has a 35% oxygen index.

Dialight can provide custom Optopipe® solutions for your applications.