www.DataSheet4U.com

■ VC5022-2 (IC501,502) : SUPER A.

(1) Terminal Layout

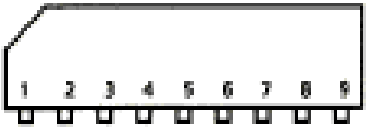

(2) Block Diagram

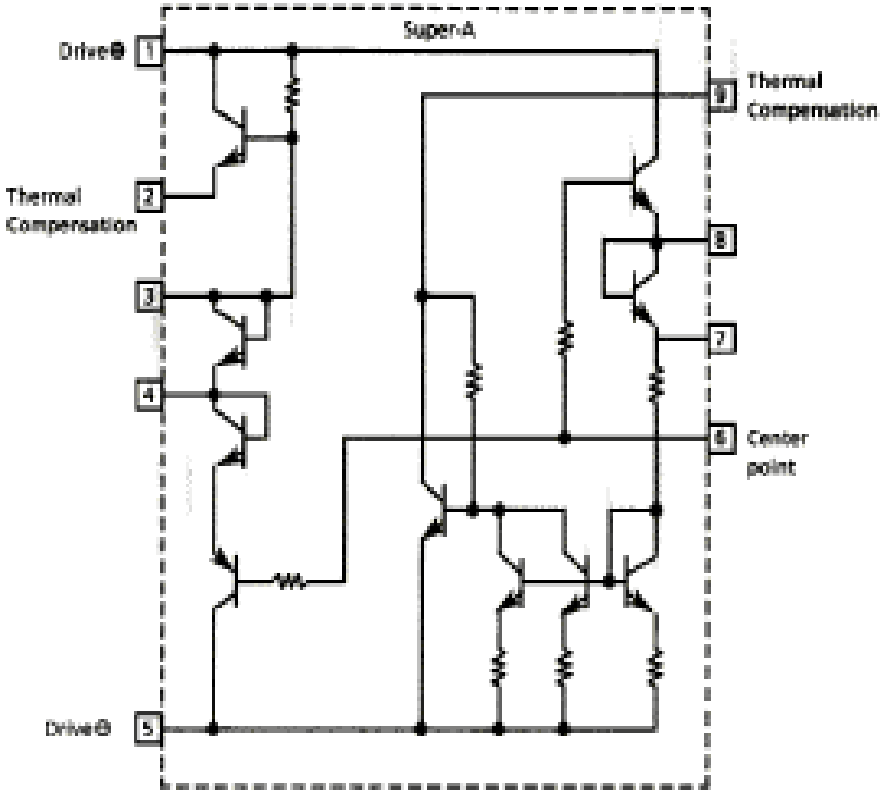

www.DataSheet4U.com