Customer Information Sheet

DRAWING No.: M80-5T10605MI-04-331-00-000	SHEET 2 OF 2	IF IN DOUBT - ASK	©	NOT TO SCALE	THIRD ANGLE PROJECTION	ALL DIMENSIONS IN mm

SPECIFICATIONS:

MATERIAL:
- MOULDING: GLASS FILLED PPS, UL94V-0, BLACK
- SIGNAL CONTACT: PHOSPHOR BRONZE
- POWER CONTACT: COPPER ALLOY
- JACKSCREW: STAINLESS STEEL

FINISH:
- SIGNAL CONTACT:
  - 0.75µ GOLD
- POWER CONTACT: GOLD

ELECTRICAL:
- WORKING VOLTAGE = 120V AC/DC
- VOLTAGE PROOF = 360V AC/DC
- INSULATION RESISTANCE = 100MΩ MIN
- SIGNAL CONTACT:
  - CURRENT RATING AT 25°C = 3.0A MAX
  - CURRENT RATING AT 85°C = 2.2A MAX
  - CONTACT RESISTANCE = 25 mΩ MAX
- POWER CONTACT:
  - CONTACT RESISTANCE 6 mΩ MAX
  - CURRENT RATING = 20A MAX

MECHANICAL:
- DURABILITY = 500 OPERATIONS
- SIGNAL CONTACT:
  - INSERTION FORCE = 2.8N MAX
  - WITHDRAWAL FORCE = 0.2N MIN
- POWER CONTACT:
  - INSERTION FORCE = 5N MAX
  - WITHDRAWAL FORCE = 0.5N MIN

ENVIRONMENTAL:
- TEMPERATURE RANGE = -55°C to +125°C

PACKING:
- TUBE

FOR COMPLETE SPECIFICATION SEE COMPONENT SPECIFICATION C005XX (LATEST ISSUE)

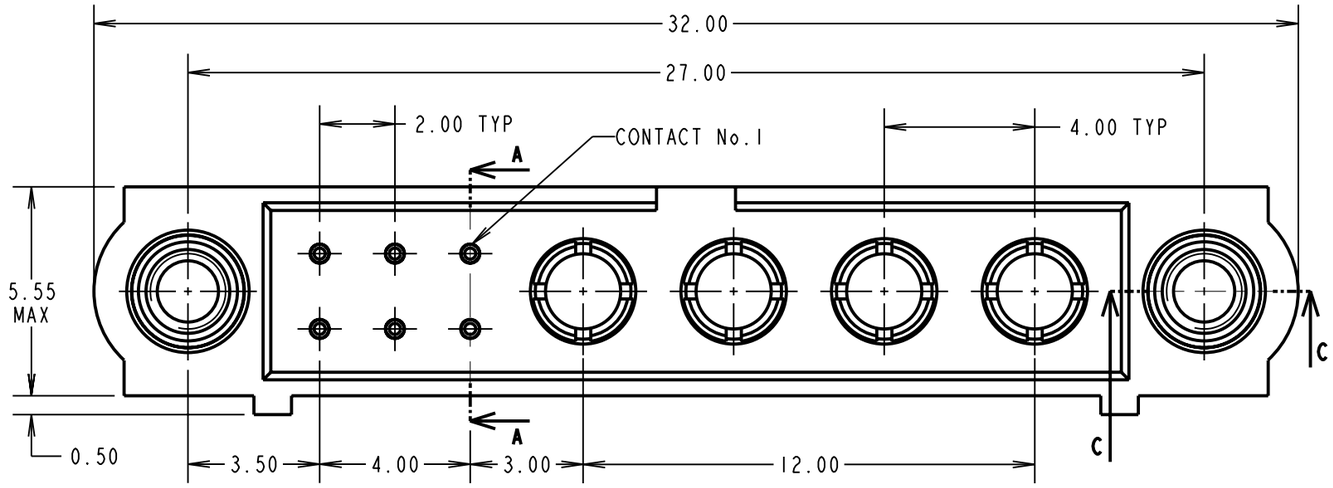

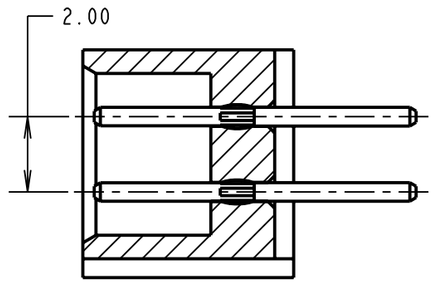

SECTION A-A

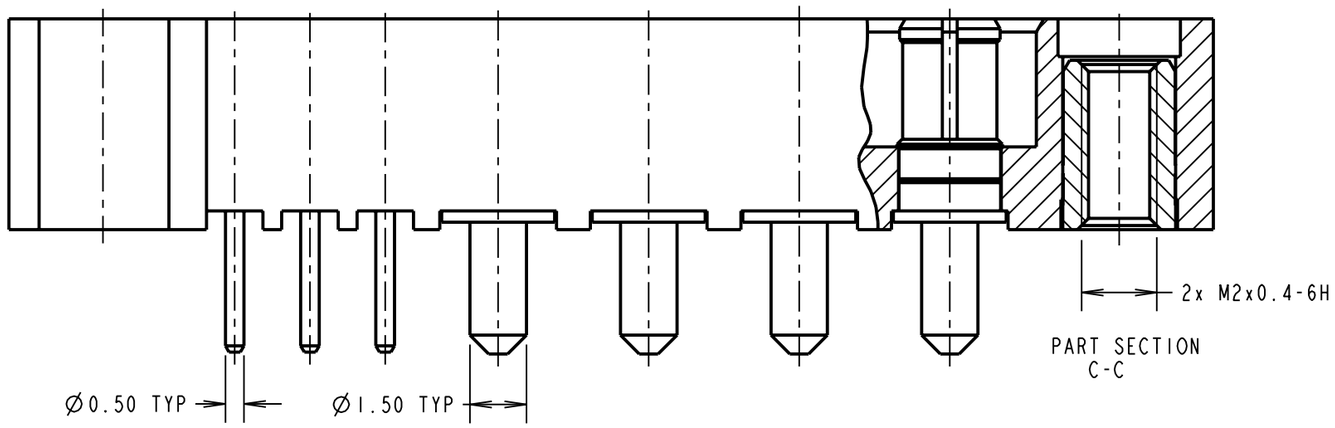

PART SECTION C-C

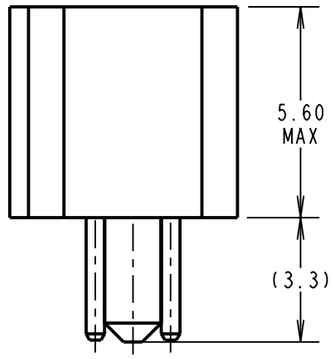

RECOMMENDED PCB LAYOUT

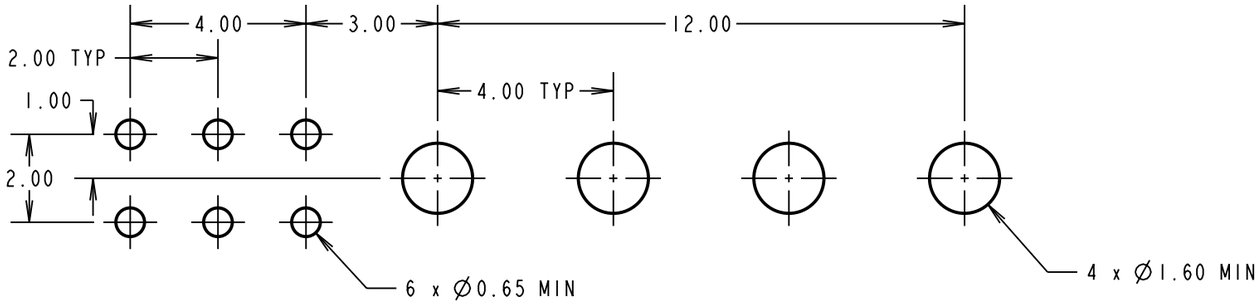

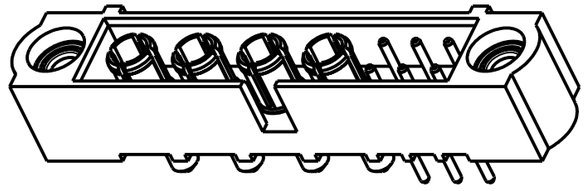

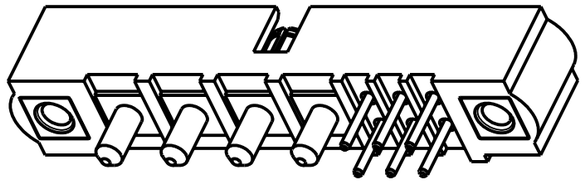

RA	A	09.04.09	----
NAME	ISS.	DATE	C/NOTE
APPROVED:	R.ADDE		
CHECKED:	M.G.PLESTED		
DRAWN:	R.ADDE		
CUSTOMER REF.:			
ASSEMBLY DRG:			

HARWIN

HARWIN USA
TEL: 603 893 5376
FAX: 603 893 5396
mis@harwin.com

HARWIN Europe (UK)
TEL: 023 9231 4545
FAX: 023 9231 4590
mis@harwin.co.uk

HARWIN Asia
TEL: +65 6 779 4909
FAX: +65 6 779 3868
mis@harwin.com.sg

THIS DRAWING AND ANY INFORMATION OR DESCRIPTIVE MATTER SET OUT HEREON ARE CONFIDENTIAL AND COPYRIGHT PROPERTY OF THE HARWIN GROUP AND MUST NOT BE DISCLOSED, LOANED, COPIED OR USED FOR MANUFACTURING, TENDERING OR FOR ANY OTHER PURPOSE WITHOUT THEIR WRITTEN PERMISSION.

TOLERANCES
X. = ±1mm
X.X = ±0.25mm
X.XX = ±0.10mm
X.XXX = ±0.01mm
ANGLES = ±5°
UNLESS STATED

MATERIAL: SEE ABOVE

FINISH: SEE ABOVE

S/AREA: mm²

TITLE: JACKSCREW DATAMATE MIXED TECHNOLOGY PC TAIL MALE ASSEMBLY

DRAWING NUMBER: M80-5T10605MI-04-331-00-000

SHT 2 OF 2