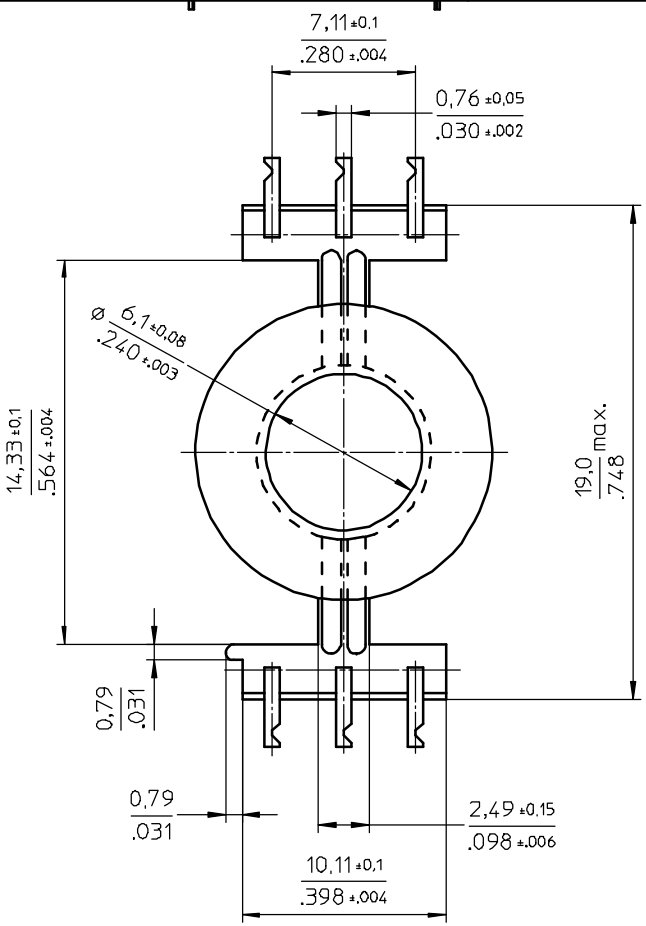

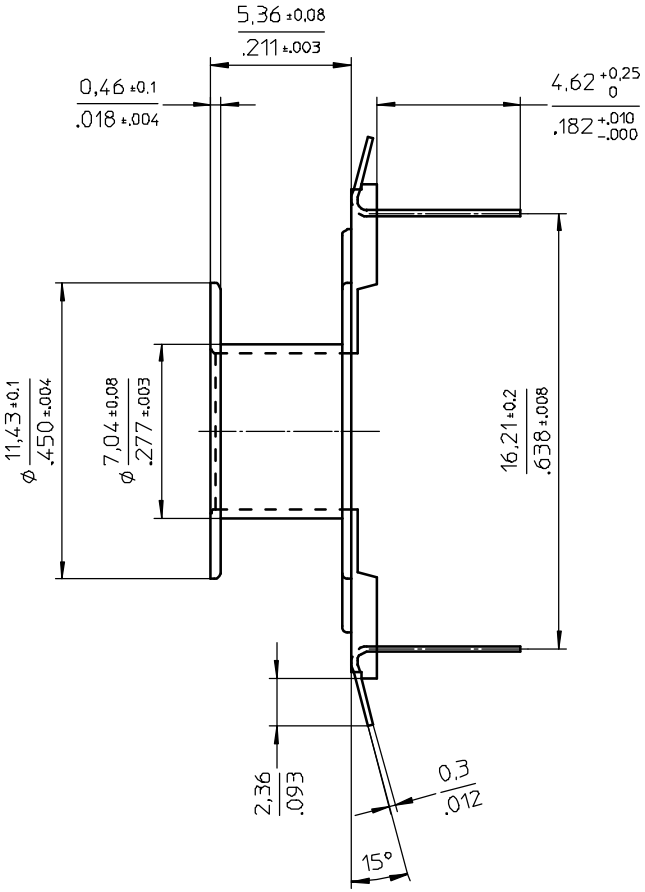

Grid pattern

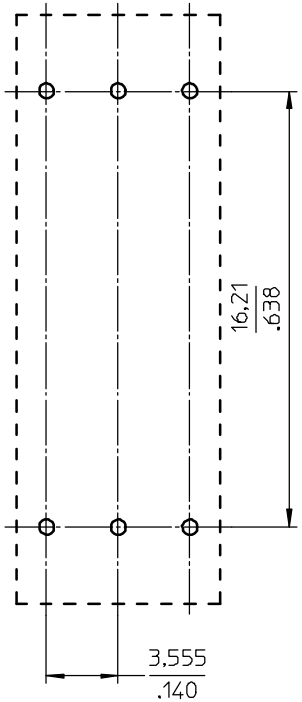

Coil former material.	Zytel FR50 (PA6.6), glass-reinforced. UL file number: E41938 - UL94V-0.
max. operating temp:	130°C, class B
pin material:	brass, Ni flash, Sn plated.
solderability:	acc. to IEC 60 068-2-20 part2, Test Ta method 1, 235°C-2sec.
mean length of turn:	1.142 inch (29,0 mm)
winding area:	0,015 sq. inch. (9,7 mm^2)

CLASS,NO.	CPV-P14/8-1S-6PD-Z	4335 060 26371	05-10-10
NAME NAAM Veekens	SUPERS. VERV.	SH BL. SH BL. 112 – 001	A3
MPA CHECK CONTR.	DAT. 05-10-10	Property of Eigendom van © FERROXCUBE 2000	