PART NAME	STEEL INTERNAL PANEL	PART No.	NBX-10980 to NBX-10983 NBX-10985 to NBX-10987 NBX-10990 NBX-10994 NBX-10996 NBX-10997	REV. DATE	5-9-07

MATERIAL: 16 GA. STEEL

FINISH: GALVANIZED

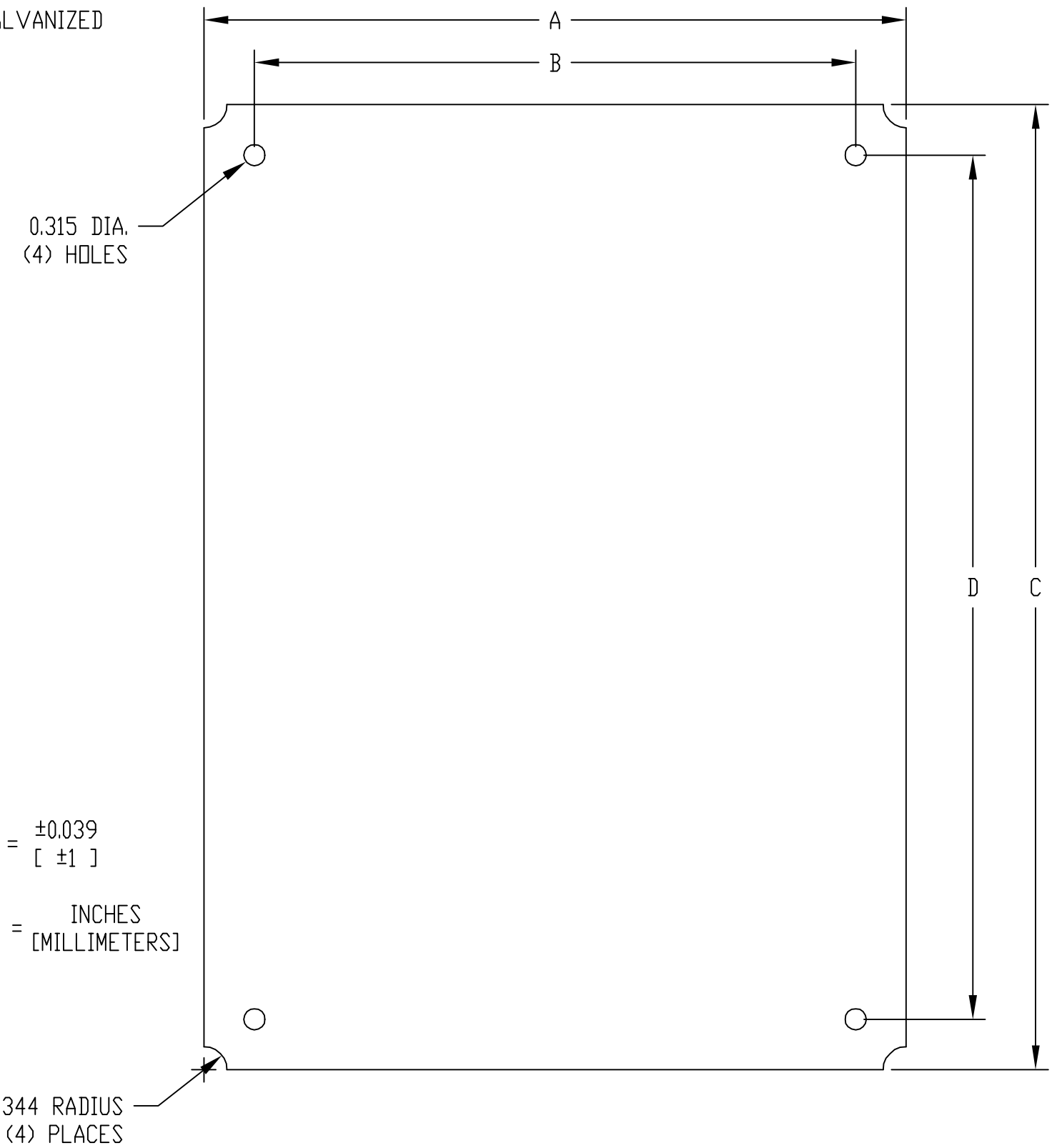

TOLERANCE = ±0.039 [±1]

DIMENSIONS = INCHES [MILLIMETERS]

ALL PANELS ARE SUPPLIED WITH QTY. (4) M5 x 10mm LG. TRUSS HD. PHILLIPS DRIVE STAINLESS STEEL MACHINE SCREWS

PART NO.	A	B	C	D
NBX-10980	6.735 [171]	5.043 [128]	10.550 [268]	8.858 [225]
NBX-10981	10.443 [265]	8.937 [228]	14.252 [362]	12.795 [325]
NBX-10982	14.282 [363]	12.913 [328]	18.228 [463]	16.850 [428]
NBX-10983	13.897 [353]	12.874 [327]	21.771 [553]	20.669 [525]
NBX-10985	6.378 [161]	4.726 [120]	9.922 [252]	8.238 [209.25]
NBX-10986	11.457 [291]	9.847 [250]	11.457 [291]	9.847 [250]
NBX-10987	10.433 [265]	8.937 [227]	14.252 [362]	12.795 [325]
NBX-10990	12.795 [325]	11.615 [295]	17.283 [439]	16.103 [409]
NBX-10994	6.378 [161]	4.726 [120]	13.937 [354]	12.205 [310]
NBX-10996	10.000 [254]	8.228 [209]	12.362 [314]	10.590 [269]
NBX-10997	10.000 [254]	8.228 [209]	13.858 [352]	12.166 [309]