FEDL2215-01

OKI Semiconductor

This version: May 2001

ML2215

Speech Synthesizer plus Music LSI with On-Chip 3 Mbit Mask ROM

GENERAL DESCRIPTION

The ML2215 is an ADPCM-based Speech Synthesizer LSI with on-chip 3 Mbit Mask ROM for storing multiple speech data. In addition, the LSI has a built-in Music Generator circuit that can generate music by automatically acquiring user-defined musical notes data from the ROM. The ML2215 contains a 12-bit D/A Converter and Low Pass Filter, and enables a user to readily built a message and music playback sub-system by simply adding an external speaker and driving amplifier.

FEATURES

- On-Chip 3 Mbit Mask ROM
- Serial Interface: User-selectable Mask options for 2-pin or 3-pin interfacing
- 3 Speech Synthesis Algorithms for user selection
  4-bit ADPCM/8-bit OKI Non-Linear PCM/8-bit PCM/Music
- Sampling Frequency (At 4.096 MHz External Clock)
  4.0 kHz, 5.3 kHz, 6.4 kHz, 8.0 kHz, 10.7 kHz, 12.8 kHz, 16.0 kHz
- Built-in Music Generator function
  User-definable 31 musical scales, 60 musical notes, and 30 tempos
- User-defined Phrases up to 247 phrases, including music.
- Built-in 12-bit D/A Converter
- Built-in Low Pass Filter
- Driver for piezo-speaker (MD pin)
- External Clock: Frequency can be selected as Mask option
  4.096 MHz, 8.192 MHz, 16.384 MHz
- Power Supply Voltage: 2.4 to 5.5 V
- Package: 20-pin plastic SSOP (SSOP20-P-44-0.65-K) (Product name: ML2215-xxxMB)
  24-pin plastic SOP (SOP24-P-430-1.27-K) (Product name: ML2215-xxxMA)

BLOCK DIAGRAM

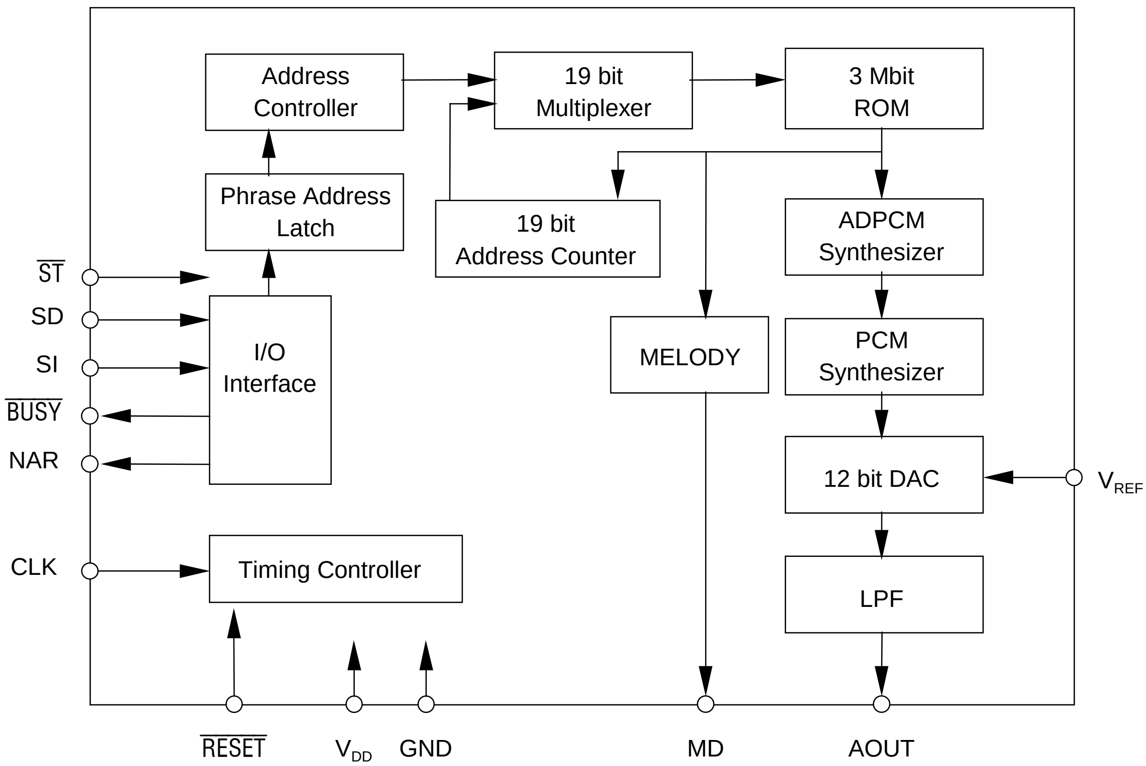

PIN CONFIGURATION (TOP VIEW)

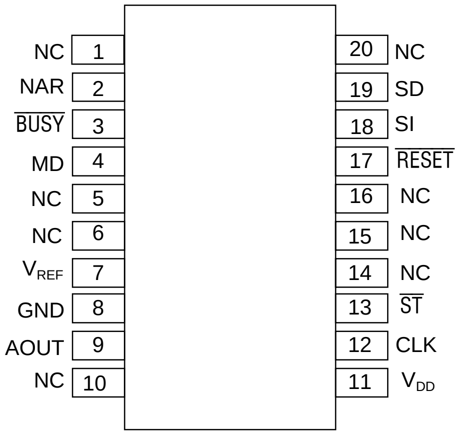

20-Pin Plastic SSOP

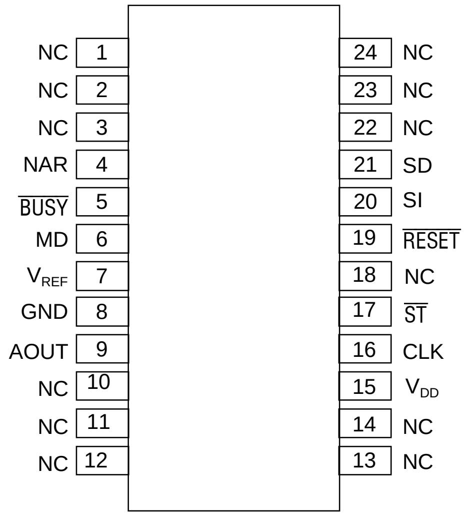

24-Pin Plastic SOP

NC: No connection

Leave the NC pin open.

Note : If the 20-Pin Plastic SSOP is used, contact the Oki sales office for availability and specifications.

PIN DESCRIPTIONS

Pin	Symbol	Type	Description
17 (19)	$\overline{\text{RESET}}$	I	“L” input to this pin turns the LSI into standby mode. At this point, output from the AOUT pin rises up to V_{DD} level, having the LSI initialized internally. By “H” input to the pin the AOUT output returns to 1/2 V_{DD} level.
2 (4)	NAR	O	This pin outputs a signal showing empty/full status of the Phase Address Latch Resister. “H” level indicates the register is empty, and thus the LSI is ready to accept serial data input. At powering up, the pin outputs “H level”.
3 (5)	$\overline{\text{BUSY}}$	O	Output “L” level while output signal is present either at the AOUT or MD pin. At powering up, the pin outputs “H” level.
4 (6)	MD	O	Music output pin
7 (7)	V_{REF}	I	DAC reference pin. Leave this pin open when not used.
9 (9)	AOUT	O	Analog output pin
8 (8)	GND	—	Ground pin
12 (16)	CLK	I	External clock input pin
18 (20)	SI	I	Serial clock input pin
19 (21)	SD	I	Serial data input pin. Input a phrase code corresponding to a phrase address through this pin.
13 (17)	$\overline{\text{ST}}$	I	This pin is used when 3-pin interfacing is selected. When 3-pin inter-facing is selected, input to the SD and SI pins is valid while the $\overline{\text{ST}}$ pin being held “L”. When this pin is at “H” level, speech synthesis is started. When 2-pin interfacing is selected, connect this pin to GND. Mask option allows the user to select either 3-pin interfacing or 2-pin interfacing.
11 (15)	V_{DD}	—	Power supply pin. Insert 0.1 μF or larger bypass capacitor between this pin and the GND pin.

* 20-pin plastic SSOP (24-pin plastic SOP)

ABSOLUTE MAXIMUM RATINGS

Parameter	Symbol	Condition	Rating	Unit
Power Supply Voltage	V_{DD}	Ta = 25°C	–0.3 to +7.0	V
Input Voltage	V_{IN}		–0.3 to V_{DD}+0.3	V
Storage Temperature	T_{STG}	—	–55 to +150	°C

RECOMMENDED OPERATING CONDITIONS

Parameter	Symbol	Condition	Range	Unit
Power Supply Voltage	V_{DD}	—	2.4 to 5.5	V
Operating Temperature	T_{OP}	—	–40 to +85	°C
External Clock Frequency	f_{EXTCK}	Selected as Mask options	4.096	MHz
			8.192	
			16.384	

ELECTRICAL CHARACTERISTICS

DC Characteristics

(V_{DD} = 2.4 to 5.5 V, GND = 0 V, Ta = –40 to 85°C)

Parameter	Symbol	Condition	Min.	Typ.	Max.	Unit
"H" Input Voltage	V_{IH}	—	$0.87 \times V_{DD}$	—	—	V
"L" Input Voltage	V_{IL}	—	—	—	$0.13 \times V_{DD}$	V
"H" Output Voltage	V_{OH}	I_{OH} = –500 µA	V_{DD}–0.3	—	—	V
"L" Output Voltage	V_{OL}	I_{OL} = 1 mA	—	—	0.4	V
"H" Input Current	I_{IH}	$V_{IH} = V_{DD}$	—	—	10	µA
"L" Input Current	I_{IL}	V_{IL} = GND	–10	—	—	µA
Operating Power Consumption	I_{DD}	—	—	1	4	mA
Standby Power Consumption	I_{DS1}	Ta = –40 to +50°C	—	—	10	µA
Standby Power Consumption	I_{DS2}	Ta = 50 to +85°C	—	—	30	µA
DA Output Relative Error	$\|V_{DAE}\|$	—	—	—	40	mV

AC Characteristics

(V_{DD} = 2.4 to 5.5 V, GND = 0 V, Ta = –40 to +85°C)

Parameter	Symbol	Condition	Min.	Typ.	Max.	Unit
CLK Duty Cycle	f_{duty}	—	40	50	60	%
$\overline{RESET}$ Input Pulse Width	$t_{W(\overline{RST})}$	—	10	—	—	µs
$\overline{RESET}$ Input Time after Powering Up	$t_{D(\overline{RST})}$	—	0	—	—	µs
Serial Clock Pulse Width	$t_{W(SI)}$	—	350	—	—	ns
Start Pulse Width	t_{SDST}	With 2-pin interfacing	1	—	—	µs
Serial Data Setup Time	t_{SDS}	—	1	—	—	µs
Serial Data Hold Time	t_{SSD}	—	1	—	—	µs
Serial Clock Setup Time	t_{SIS}	With 3-pin interfacing	1	—	—	µs
Serial Clock Hold Time	t_{SSI}	With 3-pin interfacing	1	—	—	µs

Analog Characteristics

(V_{DD} = 2.4 to 5.5 V, GND = 0 V, Ta = –40 to +85°C)

Parameter	Symbol	Condition	Min.	Typ.	Max.	Unit
AOUT Output Voltage Range	V_{AO}	—	$V_{DD}/4$	—	V_{DD}	V
AOUT Pull-up Resistor Value	R_{AO}	—	0.5	—	4.5	kΩ

AOUT Equivalent Circuit

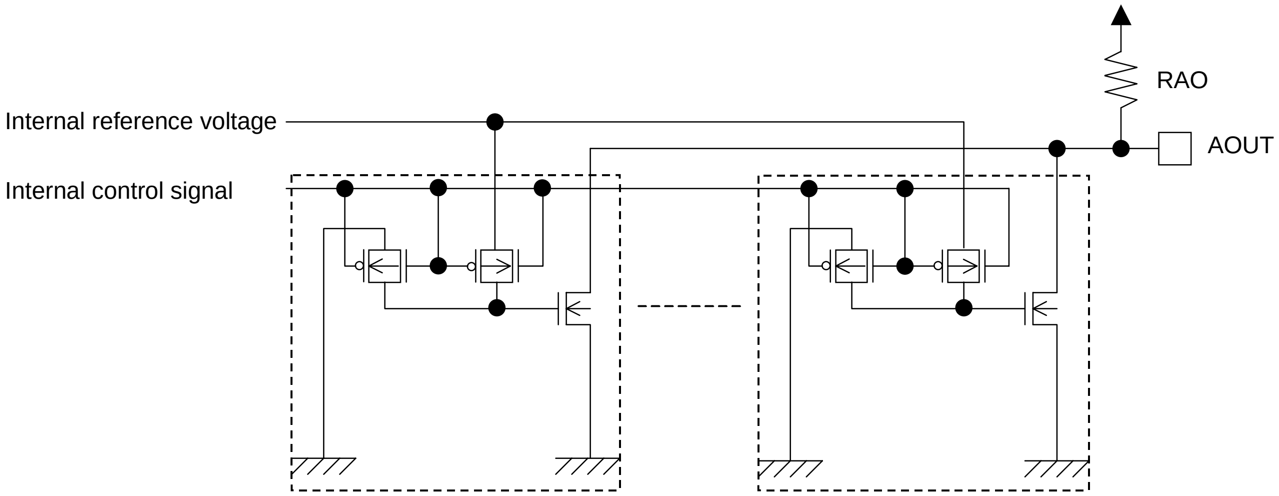

As shown above, the ML2215 uses current type DACs.

TIMING DIAGRAM

1. At powering up

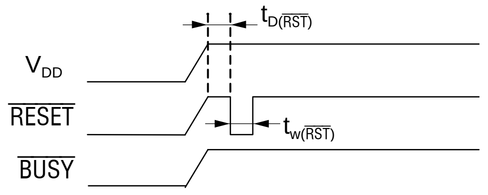

2. Activating the LSI and Standby status

2.1 When 2-pin interfacing selected as Mask option

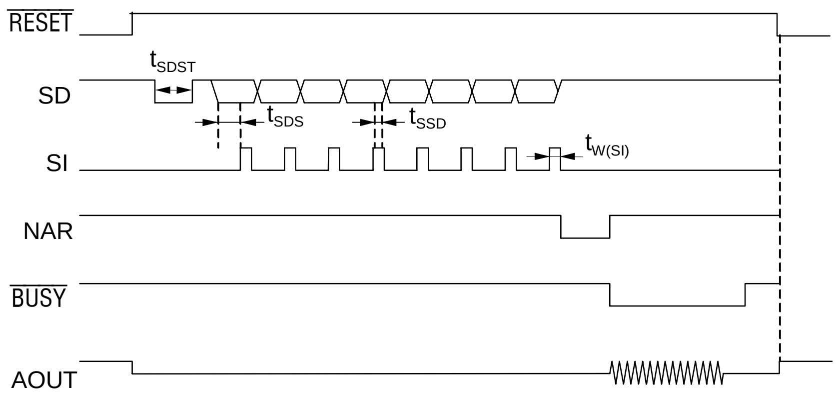

2.2 When 3-pin interfacing selected as Mask option

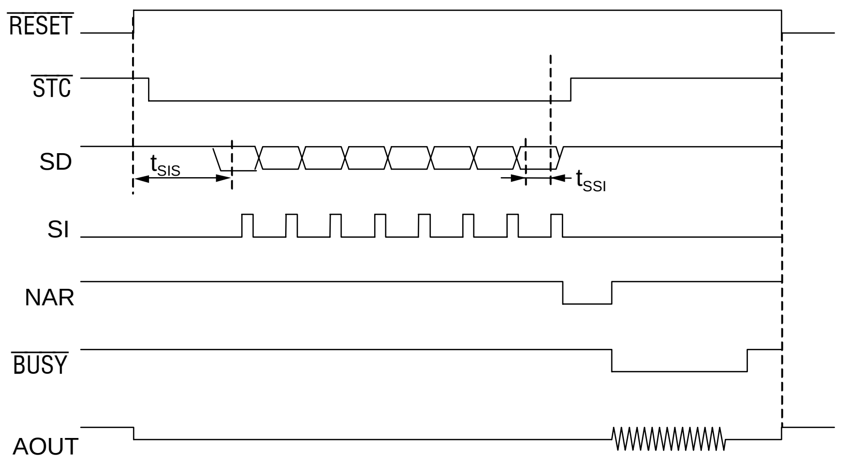

3. Continuous Playback Timing

3.1 When 2-pin interfacing selected as Mask option

1) Continuous playback by NAR

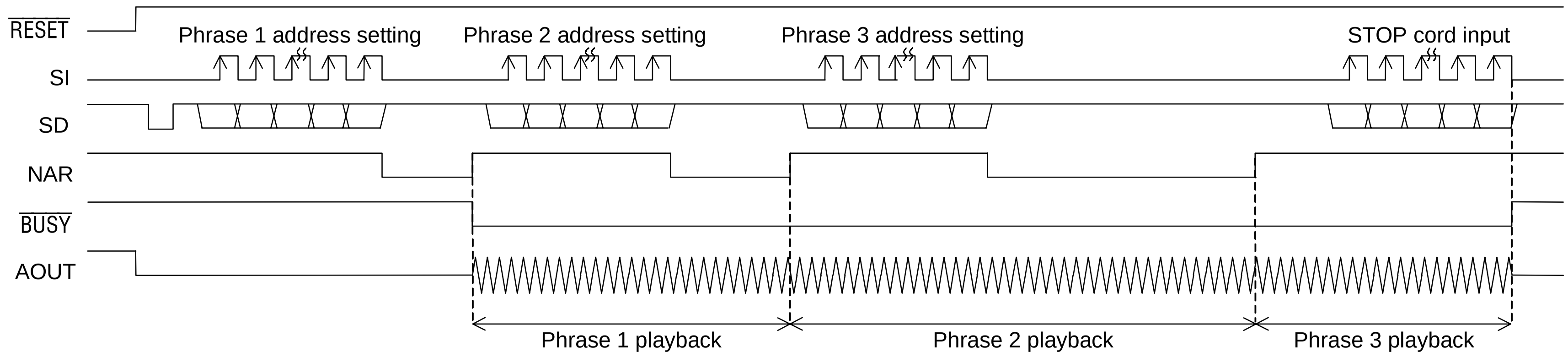

2) Continuous playback by BUSY

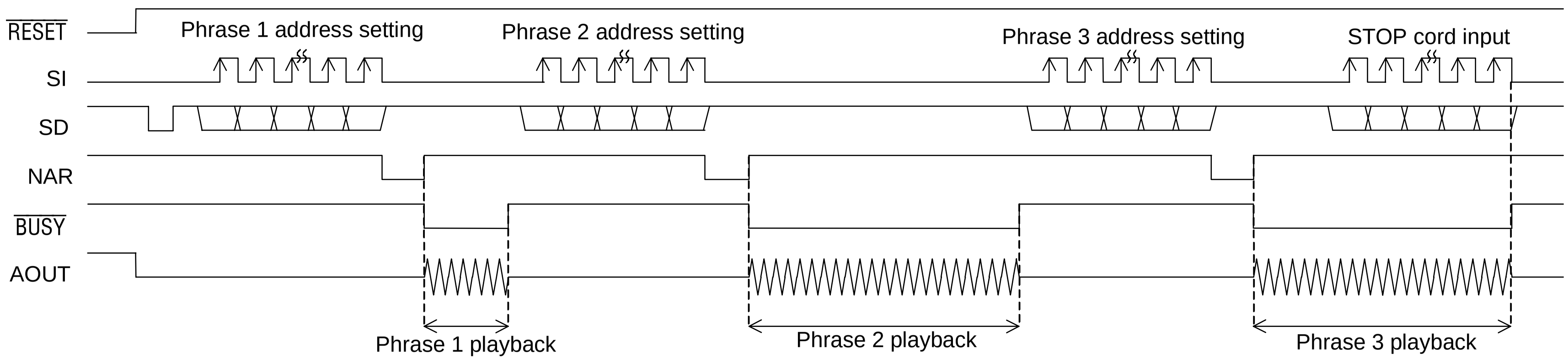

3.2 When 3-pin interfacing selected as Mask option

1) Continuous playback by NAR

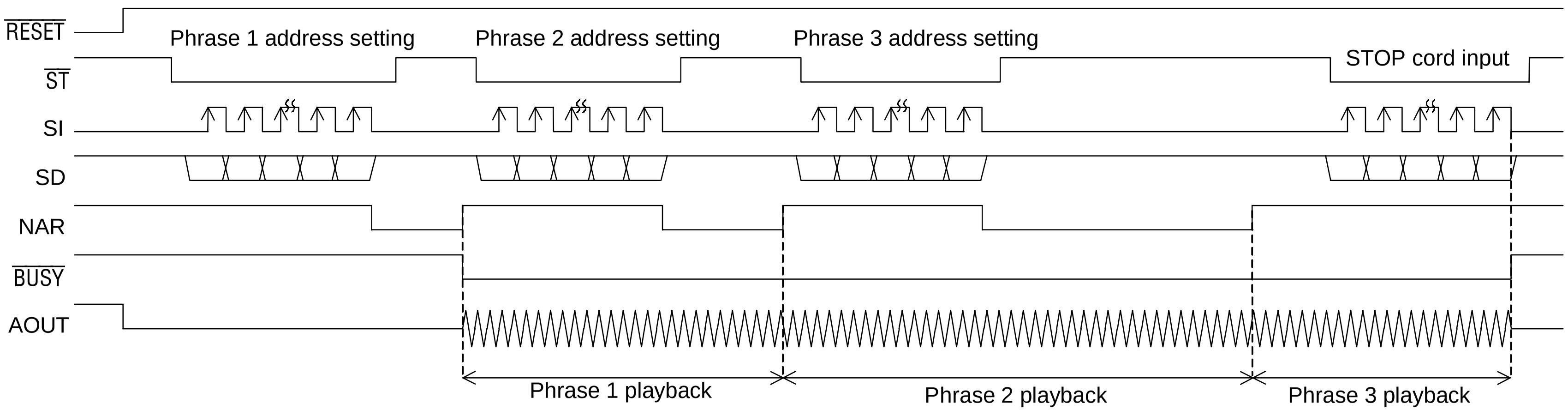

2) Continuous playback by $\overline{\text{BUSY}}$

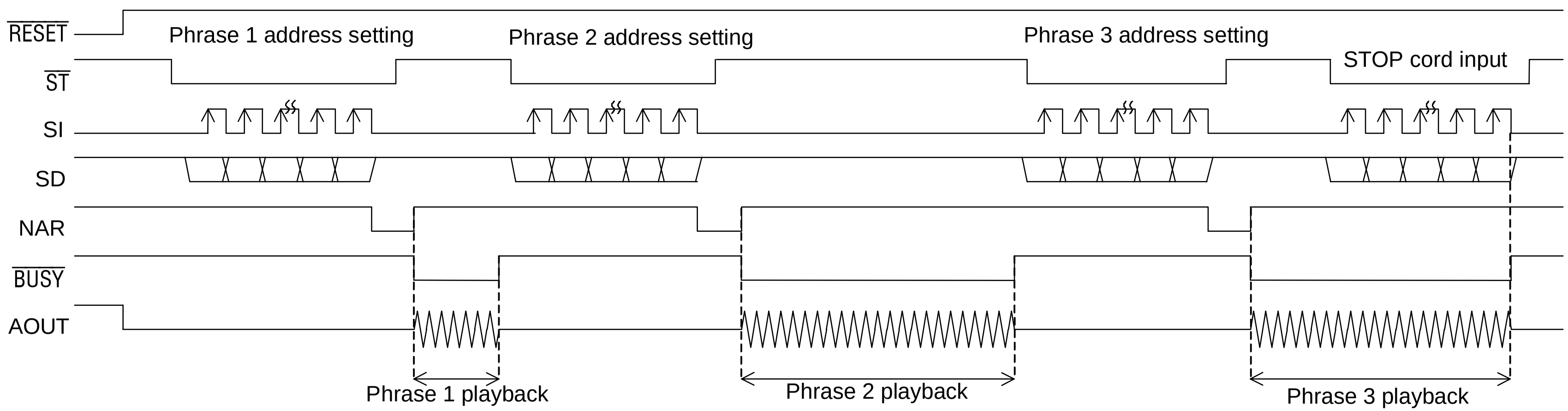

FUNCTIONAL DESCRIPTION

1. Specifying a user-defined phrase code for playback

The LSI allows a user to define up to 247 phrases. To playback a user-defined phrase, input a phrase code (phrase address) in serial order, starting with the MSB, through the SD pin.

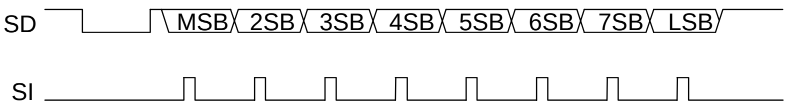

Figure 1.1 Timing for Phrase Code Input

When more than 8 SI clocks are input, the first 8-clock data is taken as valid data. Table 1.1 shows phrase codes for user-defined phrases.

Table 1.1 Phrase Code for User-defined Phrase

MSB to LSB	Code Description
00000000	Stop Code
00000001 • • 11110111	User-defined Phrase Codes
11111000 • • 11111111	Test Codes*

Note: * No test codes could be used to represent a user-defined phrase.

2. Use-Prohibited Area in on-chip Mask ROM

As shown in the Table 2.1, the last 3 bytes of on-chip Mask ROM are use-prohibited. Be sure not to use the last 3 bytes when you prepare ROM data using an analyzing tool.
Table 2.1 shows addresses that are prohibited to use, and Figure 2.1 shows the address map of on-chip Mask ROM.

Table 2.1 User's Data Area and Use-Prohibited Area in on-chip Mask ROM

User's Data Area	Use-Prohibited Area
007C8 to 5FFFC	5FFFD, 5FFFE, 5FFFF

00000H 007C7H	Phrase Control Table Area
007C8H 5FFFCH	User's Date Area
5FFFDH 5FFFFH	Test Date Area

Figure 2.1 Mask ROM Address Map

3. Mask Options

The following mask options are available to choose an interfacing type and an external clock frequency, as shown in Table 3.1.

Table 3.1 Mask Options

Option	Interfacing Type	External Clock Frequency
A	3-pin Interfacing	4.096 MHz
B	3-pin Interfacing	8.192 MHz
C	3-pin Interfacing	16.384 MHz
D	2-pin Interfacing	4.096 MHz
E	2-pin Interfacing	8.192 MHz
F	2-pin Interfacing	16.384 MHz

4. Interfacing Types

Mask option allows a user to select a interfacing type and a frequency of external clock input. Available options are listed in Table 3.1 below.

4.1 2-pin Controlled Serial Input Interface

2-pin interfacing uses the SD and SI pins to control interfacing. Pull the $\overline{\mathrm{ST}}$ pin down to "L".

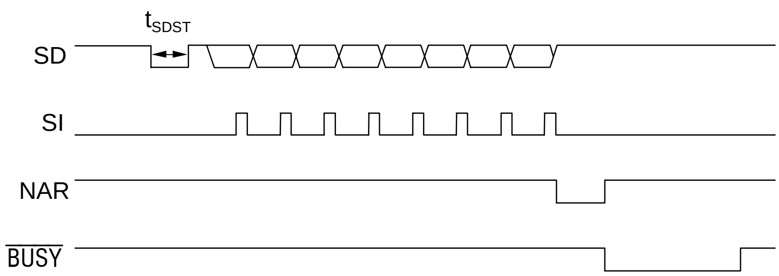

Figure 4.1 Timing Chart of Serial Input

As shown in Figure 4.1, serial data input is enabled by entering 1 μsec or longer "L" input (the Start-bit input) to the SD pin. Serial data input to the SD pin is fetched to the internal register in synchronization with the falling edge of the SI's 8th clock as a phrase code for a user-defined phrase.

You must input the external clock to the CLK pin. Otherwise, serial data input cannot be acquired internally, regardless $t_{SDST} \geq 1$ µs or $t_{SDST} < 1$ µs.

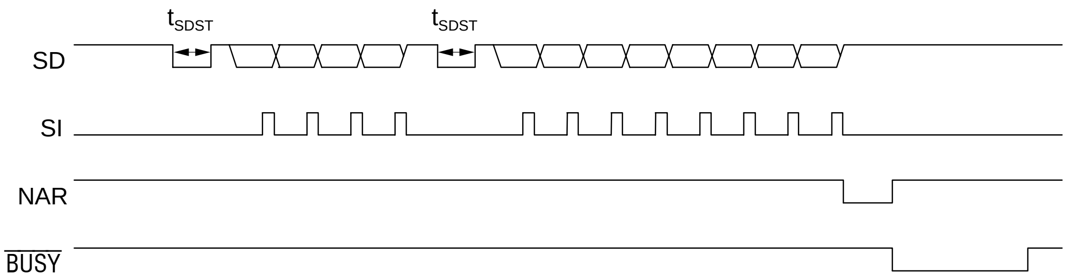

Figure 4.2 Timing Chart of Serial Input

As shown in Figure 4.2, re-inputting the Start-bit before the SI's 8th clock cancels the preceding serial data entry, and 8-clock data following the Start-bit is taken as valid data.

4.2 3-pin Controlled Serial Input Interface

3-pin interfacing uses the SD, SI and $\overline{\mathrm{ST}}$ pins to control interfacing.

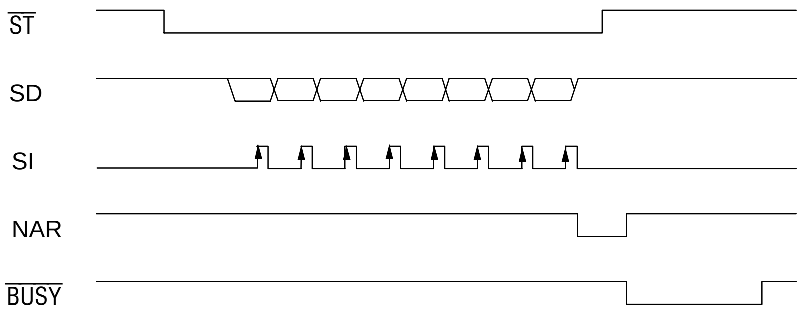

Figure 4.3 Timing Chart of Serial Input

When 3-pin interfacing is selected, input to the SD and SI pins is enabled while the $\overline{\mathrm{ST}}$ pin being held "L". Serial data input to the SD pin is acquired to the internal register in synchronization with the falling edge of the SI's 8th clock as an 8-bit phrase code for a user-defined phrase. If the $\overline{\mathrm{ST}}$ pin is brought back to "H" before the SI's 8th clock, the preceding entry is cancelled, and 8-clock data after the $\overline{\mathrm{ST}}$ pin being brought back to "L" again is taken as valid data.

5. External Clock Input

Mask option allows a user to choose an external clock frequency, as shown in Table 5.1.

Table 5.1 External Clock Frequency and Sampling Frequency

External Clock Frequency	Internal Sampling Frequency
4.096 MHz	4.0 kHz, 5.3 kHz, 6.4 kHz, 8.0 kHz, 10.7 kHz, 12.8 kHz, 16.0 kHz
8.192 MHz	4.0 kHz, 5.3 kHz, 6.4 kHz, 8.0 kHz, 10.7 kHz, 12.8 kHz, 16.0 kHz
16.384 MHz	4.0 kHz, 5.3 kHz, 6.4 kHz, 8.0 kHz, 10.7 kHz, 12.8 kHz, 16.0 kHz

When an external clock frequency were chosen as Mask option and a different frequency input were made, the sampling frequency changes in proportion to the actual input frequency. For example, while 4.096 MHz external clock frequency option was selected as Mask option, and when 6.144 MHz external clock is actually input, then the sampling frequency changes accordingly, e.g. sampling frequency at 1.5 times of those shown in Table 5.1.

6. Stop Code

The Stop code input (Table 1.1) to the SD pin during playback let the LSI stop playback on the SI's falling edge following to the LSB input, and the AOUT fall down to 1/2 V_{DD} level. If the LSI playbacks a music phrase, music stops as well.

Timings for the Stop code input are shown below, for 2-pin interfacing in Figure 6.1 and for 3-pin interfacing in Figure 6.2 respectively.

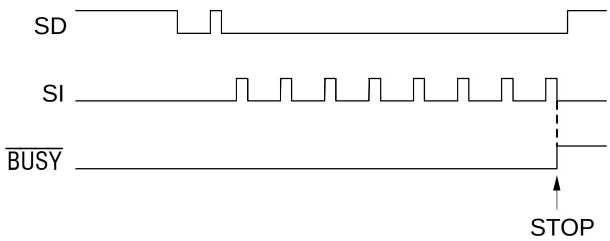

Figure 6.1 Timing for Stop Code Input - 2-pin Interfacing

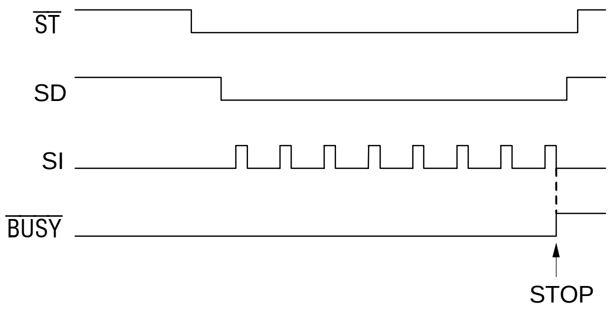

Figure 6.2 Timing for Stop Code Input - 3-pin Interfacing

7. Volume Setting

The volume of the AOUT pin can be adjusted by applying voltage to the V_{REF} pin.

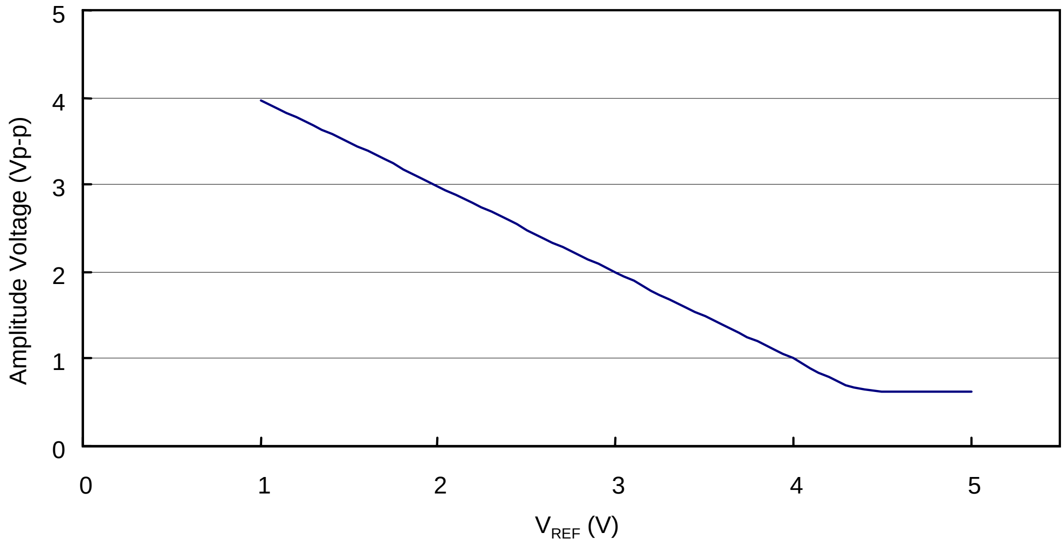

Figure 7.1 V_{REF} – AOUT Amplitude

Figure 7.1 shows the relationship between the V_{REF} voltage and the AOUT amplitude. Set the V_{REF} voltage in the range of 1 to 4 V. The relationship is given by the equation:

AOUT (p-p) $\cong 5 - V_{REF}$ ($V_{REF} = 1$ to 4 V).

When a volume is not adjusted, leave the V_{REF} pin open.

8. Music Generator

The Music Generator circuit initiates music output via the MD pin by activating a user-defined music phrase from an external controller. The Music Generator outputs music, automatically acquiring musical notes data stored in the Mask ROM. Acquiring the last note code where the end-bit is set to “1”, results in stopping playback.

A user can define a music phrase by entering the starting address and tempo data in the Phrase Control Table, and codes for musical notes and the end-bit information in the User’s Data area. These data for a music phrase, based on the score of music, can be created and entered by using an OKI’s Analyzing Tool according to coding rules and formats described later in this document.

8.1 Tempo Data

Tempo data for a music phrase can be defined in the Phrase Control Table while preparing ROM data. Tempo cannot be changed from an external controller.

Tempo data defines a beat and rhythm for a music phrase. Table 8.1 lists tempos (the count of quarter notes per minute) available for user’s selection.

Table 8.1 Tempos for Music Phrases

TEMPO						Tempo
	TP4	TP3	TP2	TP1	TP0	
0H	0	0	0	0	0	♩ = 625
1H	0	0	0	0	1	= 625
2H	0	0	0	1	0	= 416.7
3H	0	0	0	1	1	= 312.5
4H	0	0	1	0	0	= 250
5H	0	0	1	0	1	= 208.3
6H	0	0	1	1	0	= 178.6
7H	0	0	1	1	1	= 156.7
8H	0	1	0	0	0	= 138.9
9H	0	1	0	0	1	= 125
AH	0	1	0	1	0	= 113.6
BH	0	1	0	1	1	= 104.2
CH	0	1	1	0	0	= 96.2
DH	0	1	1	0	1	= 89.3
EH	0	1	1	1	0	= 83.3
FH	0	1	1	1	1	= 78.1
10H	1	0	0	0	0	= 73.5
11H	1	0	0	0	1	= 69.4
12H	1	0	0	1	0	= 65.8
13H	1	0	0	1	1	= 62.5
14H	1	0	1	0	0	= 59.5
15H	1	0	1	0	1	= 56.8
16H	1	0	1	1	0	= 54.3
17H	1	0	1	1	1	= 52.1
18H	1	1	0	0	0	= 50
19H	1	1	0	0	1	= 48.1
1AH	1	1	0	1	0	= 46.3
1BH	1	1	0	1	1	= 44.6
1CH	1	1	1	0	0	= 43.1
1DH	1	1	1	0	1	= 41.7
1EH	1	1	1	1	0	= 40.3
1FH	1	1	1	1	1	= 39.1

8.2 Musical Note Data

Musical note data consists of 2 bytes and is stored in the Mask ROM's User's Data area, where a user can define scale, note and the end-bit for a music phrase. Table 8.2 shows the coding format for musical note data.

Table 8.2 Coding Format for Musical Note Data

	NSB	7SB	6SB	5SB	4SB	3SB	2SB	LSB	
The First Byte	END-Bit	0	L5	L4	L3	L2	L1	L0	Musical Note Code
The Second Byte	N7	N6	N5	N4	N3	N2	N1	N0	Musical Scale Code

(1) Musical Scale Code

Musical scale code is defined at the second byte. The following equation shows output frequency from the Music Generator circuit at 4.096 MHz external clock.

$$\frac{32}{(N + 2)}\ \text{kHz (“N” is integer between 4 to 127)}$$

Co-relationship between “N” and musical scale can be calculated as follows:

$$N = 2^7N7 + 2^6N6 + 2^5N5 + 2^4N4 + 2^3N3 + 2^2N2 + 2^1N1 + 2^0N0$$

When all values for N7 to N2 are set to “0”, no music is reproduced during the period specified by the note code. At this instance, the values of N1 and N0 have no significance (Don't care).
Table 8.3 shows major musical scales (keys) and their corresponding scale codes.

Table 8.3 Musical Scales and Corresponding Scale Codes

Musical Scale	Frequency (Hz)	Scale Code								
		N7	N6	N5	N4	N3	N2	N1	N0	N7 to N0
C^1	261.22	1	1	1	1	0	0	1	1	F3H
Cis^1	277.06	1	1	1	0	0	1	0	1	E5H
D^1	293.58	1	1	0	1	1	0	0	0	D8H
Dis^1	310.68	1	1	0	0	1	1	0	0	CCH
E^1	329.90	1	1	0	0	0	0	0	0	C0H
F^1	349.73	1	0	1	1	0	1	0	1	B5H
Fis^1	369.94	1	0	1	0	1	0	1	1	ABH
G^1	392.64	1	0	1	0	0	0	0	1	A1H
Gis^1	415.58	1	0	0	1	1	0	0	0	98H
A^1	441.38	1	0	0	0	1	1	1	1	8FH
Ais^1	467.15	1	0	0	0	0	1	1	1	87H
B^1	492.31	1	0	0	0	0	0	0	0	80H
C^2	524.59	0	1	1	1	1	0	0	0	78H
Cis^2	556.52	0	1	1	1	0	0	0	1	71H
D^2	587.16	0	1	1	0	1	0	1	1	6BH
Dis^2	621.36	0	1	1	0	0	1	0	1	65H
E^2	659.79	0	1	0	1	1	1	1	1	5FH
F^2	695.65	0	1	0	1	1	0	1	0	5AH
Fis^2	744.19	0	1	0	1	0	1	0	0	54H
G^2	780.49	0	1	0	1	0	0	0	0	50H
Gis^2	831.17	0	1	0	0	1	0	1	1	4BH
A^2	876.71	0	1	0	0	0	1	1	1	47H
Ais^2	927.54	0	1	0	0	0	0	1	1	43H
B^2	984.62	0	0	1	1	1	1	1	1	3FH
C^3	1049.18	0	0	1	1	1	0	1	1	3BH
Cis^3	1103.45	0	0	1	1	1	0	0	0	38H
D^3	1185.19	0	0	1	1	0	1	0	0	34H
Dis^3	1254.90	0	0	1	1	0	0	0	1	31H
E^3	1306.12	0	0	1	0	1	1	1	1	2FH
F^3	1391.30	0	0	1	0	1	1	0	0	2CH
Fis^3	1488.37	0	0	1	0	1	0	0	1	29H

(2) Musical Note Code

The first byte of music data code is where a user can define musical note code. Table 8.4 shows musical notes and their corresponding note codes (L5 to L0). When all bits are set to "0", the duration or beat of the note is identical to that of the code with L0 alone set to "1" (1/64).

Table 8.4 Musical Notes and Corresponding Note Codes

Musical Note	Note Code						
	L5	L4	L3	L2	L1	L0	L5 to L0
𝅗𝅥	1	1	1	1	1	1	3FH
♩.	1	0	1	1	1	1	2FH
♩	0	1	1	1	1	1	1FH
♪.	0	1	0	1	1	1	17H
♪	0	0	1	1	1	1	0FH
𝅘𝅥𝅯.	0	0	1	0	1	1	0BH
𝅘𝅥𝅯	0	0	0	1	1	1	07H
𝅘𝅥𝅰	0	0	0	1	0	1	05H

When N6 to N0 are set to "0" in scale code definition, the code means "Rest". Table 8.5 shows rests and their corresponding rest codes (L5 to L0).

Table 8.5 Rests and Corresponding Rest Codes

Rest	Rest Code						
	L5	L4	L3	L2	L1	L0	L5 to L0
𝄼	1	1	1	1	1	1	3FH
𝄽	0	1	1	1	1	1	1FH
𝄾.	0	1	0	1	1	1	17H
𝄾	0	0	1	1	1	1	0FH
𝄿	0	0	0	1	1	1	07H
𝅀	0	0	0	0	1	1	03H

The following formula can be used to calculate the duration or beat of a musical note (including rest), that is defined by a note code and tempo code.

$1.5 \times (TP+1) \times (L+1)$ msec (Where TP is integer between 1 to 31, and L is integer between 4 to 63)

TP is a numerical value defined in the Phrase Control Table and its bit correspondence to tempo data can be calculated as follows:

$TP = 2^4TP4 + 2^3TP3 + 2^2TP2 + 2^1TP1 + 2^0TP0$

Meanwhile, L is defined by a musical note code, and its bit correspondence to the musical note code can be calculated as follows:

$L = 2^5L5 + 2^4L4 + 2^3L3 + 2^2L2 + 2^1L1 + 2^0L0$

(3) End-Bit

The end-bit is set at the first byte, the MSB, of music phrase data. As soon as the LSI starts to output the last note code where the end-bit is set to “1”, the Music Generator circuit issues an end-music interrupt call and stops playback after the last note code has been output.

8.3 Sample Musical Note Codes

Table 8.6 shows sample codes to output a part of musical score shown in Figure 8.3.
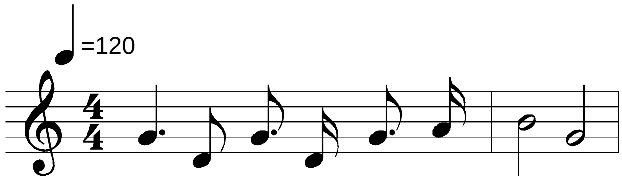
Figure 8.3

Table 8.6 Coding Sample

Musical Note	Note Code																
	1st Byte								2nd Byte								Hexa-decimal
	7	6	5	4	3	2	1	0	7	6	5	4	3	2	1	0	
	END	—*	L5	L4	L3	L2	L1	L0	N7	N6	N5	N4	N3	N2	N1	N0	
G^2	0	0	1	0	1	1	1	1	0	1	0	1	0	0	0	0	2F50H
D^2	0	0	0	0	1	1	1	1	0	1	1	0	1	0	1	1	0F6BH
G^2	0	0	0	1	0	1	1	1	0	1	0	1	0	0	0	0	1750H
D^2	0	0	0	0	0	1	1	1	0	1	1	0	1	0	1	1	076BH
G^2	0	0	0	1	0	1	1	1	0	1	0	1	0	0	0	0	1750H
A^2	0	0	0	0	0	1	1	1	0	1	0	0	0	1	1	1	0747H
B^2	0	0	1	1	1	1	1	1	0	0	1	1	1	1	1	1	3F3FH
G^2	1	0	1	1	1	1	1	1	0	1	0	1	0	0	0	0	BF50H

Note: * Bit 6 of the first byte can be either “0” or “1” (Don’t care bit), so is set to “0” in the above sample codes.

9. Buzzer

You can define a buzz phrase by setting a frequency and sound type in the Phrase Control Table and a buzz phrase in the User's Data area. To start buzzer output via the MD pin, activate a buzz phrase. To stop buzzer output, enter the Stop Code.

4 buzzing sound types, intermittent 1, intermittent 2, single and continuous, and 3 50%-duty frequencies, at 0.5 kHz, 1.0 kHz and 2.0 kHz, are available for user selection, depending on buzzer output mode setup in the Phrase Control Table.

Figure 9.1 shows output wave-form in respective output modes. Black-filled wave-form indicates buzz output signal at 0.5/1.0/2.0 kHz.

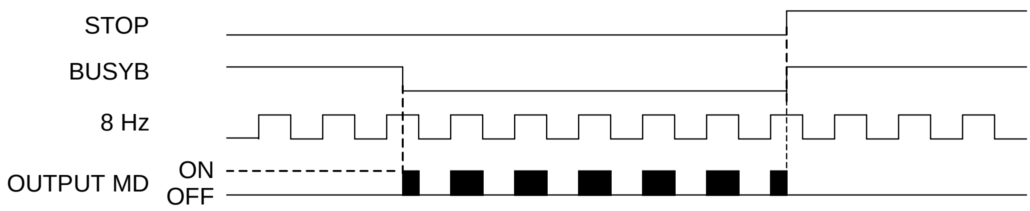

(a) TP1 = 0, TP0 = 0 (intermittent 1)

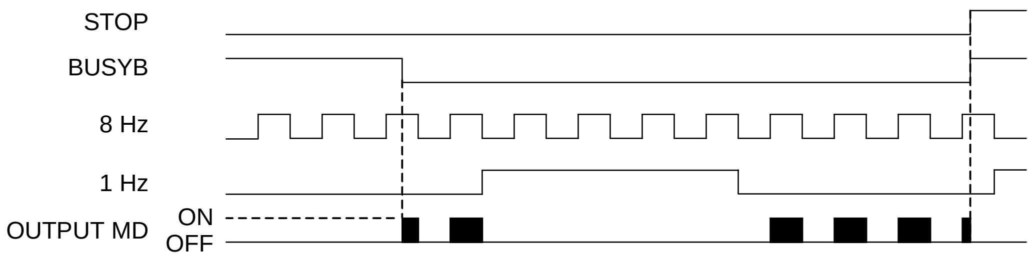

(b) TP1 = 0, TP0 = 1 (intermittent 2)

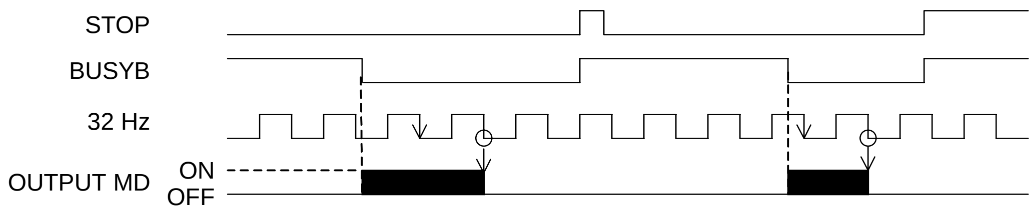

(c) TP1 = 1, TP0 = 0 (single)

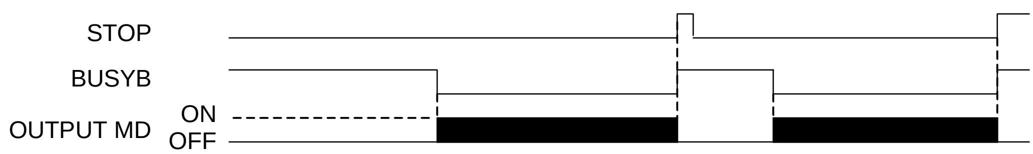

(d) TP1 = 1, TP0 = 1 (continuous)

Figure 9.1 Output Wave-form from the Buzzer Driver in Each Output Mode

10. Low Pass Filter

ML2213's analog output goes through the built-in Low Pass Filter. The Figure 10.1 below shows Frequency Characteristics and Table 10.1 shows Cut-off Frequency of the LPF.
No analog output passing through the LPF is available on this chip.

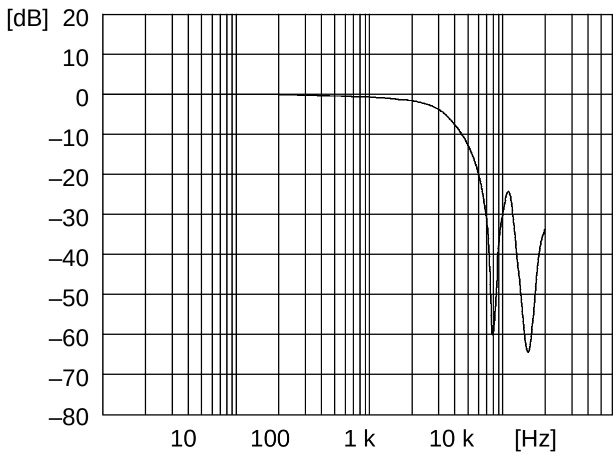

Figure 10.1 LPF Frequency Characteristics (f_{SAM} = 8 kHz)

Table 10.1 LPF Cut-off Frequency

Sampling Frequency (kHz) (f_{SAM})	Cut-off Frequency (kHz) (f_{CUT})
4.0	1.2
5.3	1.6
6.4	2.0
8.0	2.5
10.6	3.2
12.8	4.0
16.0	5.0

11. AOUT Connecting Circuit

It is recommended to connect a capacitor of 0.01 to 0.033 µF to the AOUT pin.
The circuit diaram is as shown below.

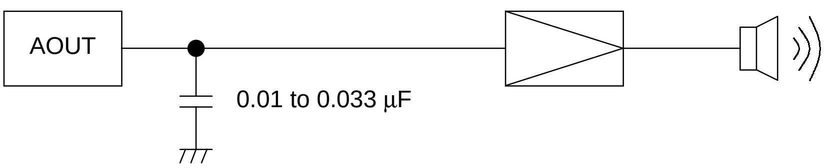

The capacitor is used for improving a voice quality. Check the voice quality before determining the capacitor value. If the voice quality is excellent without connecting a capacitor, no capacitor is required.

APPLICATION CIRCUITS

When 2-pin interfacing is selected
(Fix the $\overline{\mathrm{ST}}$ pin to GND.)

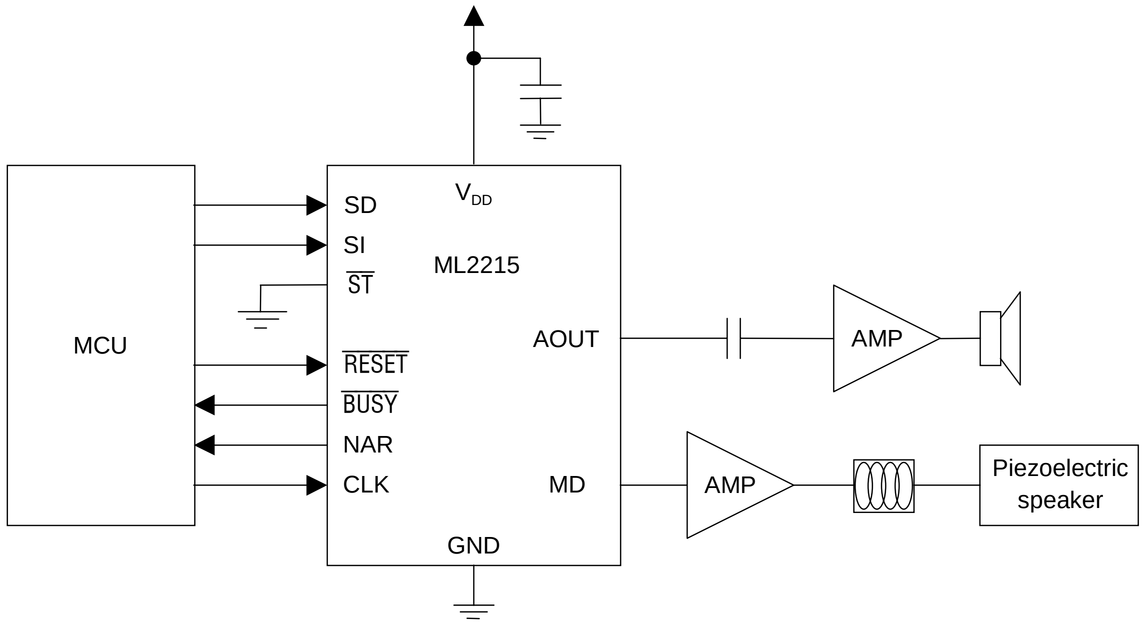

PACKAGE DIMENSIONS

(Unit : mm)

SSOP20-P-44-0.65-K

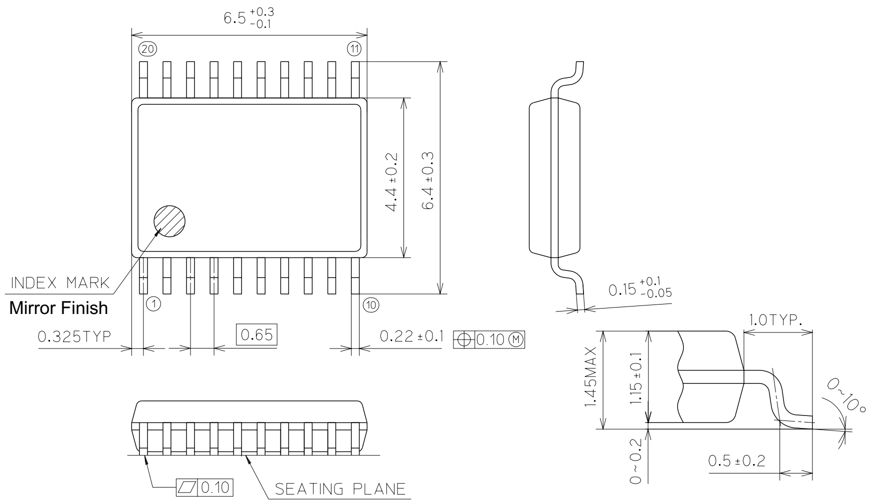

Package material	Epoxy resin
Lead frame material	42 alloy
Pin treatment	Solder plating (≥5μm)
Package weight (g)	0.088 TYP.
Rev. No./Last Revised	1/Jan. 22, 1999

Oki Electric Industry Co.,Ltd.

Notes for Mounting the Surface Mount Type Package

The surface mount type packages are very susceptible to heat in reflow mounting and humidity absorbed in storage.
Therefore, before you perform reflow mounting, contact Oki's responsible sales person for the product name, package name, pin number, package code and desired mounting conditions (reflow method, temperature and times).

(Unit: mm)

SOP24-P-430-1.27-K

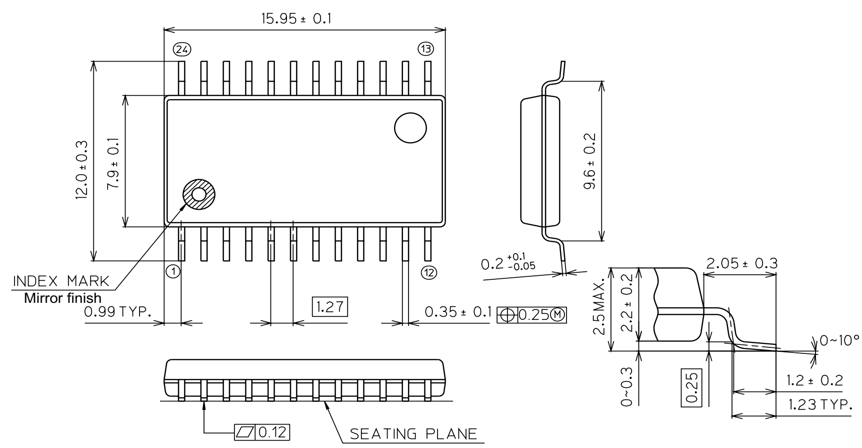

Oki Electric Industry Co., Ltd.

Package material	Epoxy resin
Lead frame material	42 alloy
Pin treatment	Solder plating (≥5μm)
Package weight (g)	0.58 TYP.
Rev. No./Last Revised	5/Oct. 13, 1998

Notes for Mounting the Surface Mount Type Package

The surface mount type packages are very susceptible to heat in reflow mounting and humidity absorbed in storage.
Therefore, before you perform reflow mounting, contact Oki's responsible sales person for the product name, package name, pin number, package code and desired mounting conditions (reflow method, temperature and times).

NOTICE

1. The information contained herein can change without notice owing to product and/or technical improvements. Before using the product, please make sure that the information being referred to is up-to-date.

2. The outline of action and examples for application circuits described herein have been chosen as an explanation for the standard action and performance of the product. When planning to use the product, please ensure that the external conditions are reflected in the actual circuit, assembly, and program designs.

3. When designing your product, please use our product below the specified maximum ratings and within the specified operating ranges including, but not limited to, operating voltage, power dissipation, and operating temperature.

4. Oki assumes no responsibility or liability whatsoever for any failure or unusual or unexpected operation resulting from misuse, neglect, improper installation, repair, alteration or accident, improper handling, or unusual physical or electrical stress including, but not limited to, exposure to parameters beyond the specified maximum ratings or operation outside the specified operating range.

5. Neither indemnity against nor license of a third party's industrial and intellectual property right, etc. is granted by us in connection with the use of the product and/or the information and drawings contained herein. No responsibility is assumed by us for any infringement of a third party's right which may result from the use thereof.

6. The products listed in this document are intended for use in general electronics equipment for commercial applications (e.g., office automation, communication equipment, measurement equipment, consumer electronics, etc.). These products are not authorized for use in any system or application that requires special or enhanced quality and reliability characteristics nor in any system or application where the failure of such system or application may result in the loss or damage of property, or death or injury to humans.
   Such applications include, but are not limited to, traffic and automotive equipment, safety devices, aerospace equipment, nuclear power control, medical equipment, and life-support systems.

7. Certain products in this document may need government approval before they can be exported to particular countries. The purchaser assumes the responsibility of determining the legality of export of these products and will take appropriate and necessary steps at their own expense for these.

8. No part of the contents contained herein may be reprinted or reproduced without our prior permission.