M61523FP

Elctronic Volume With Scf Type Tone Control To 6 Speakers

REJ03F0009-0100Z
Rev.1.00
Sep.04.2003

Description

The M61523FP is a semiconductor integrated circuit using the SCF technology. This IC is no need external parts of Tone and Loudness block. External components for pop-noise were reduced by built-in the offset reduction circuit and several pop-noise improvement circuit.

Features

- Dual source type (Main/Sub) Input selector
  Input of single 3ch and the differential 1ch.
- Input gain amp.
  Main selector and Sub selector can do the setting of gain independently
  0dB to +14dB/1dBstep, +14dB to +20dB/2dB step
- Built-in 2ch master volume with soft-changing circuit for pop-noize
  +6dB to –80dB/1dBstep, –∞dB (L and R independence control)
- FADER
  Front, Rear : 0dB to –48dB/2dB step, –56, –∞dB
  (Front and Rear independence control, L and R are controlled at the same time)
  Non FADER : –26dB to +12dB/2dB step, –∞dB
  (FRONT and REAR are controlled at the same time)
  Built in soft-changing circuit for pop-noize.
- Built-in Loudness : 0dB to –15dB/1dB step
  fo: 400Hz, 800Hz
- Built-in 2 band Tone Control
  Bass : –14dB to +16dB/2dB step
  fo: 50Hz, 80Hz, 120Hz Q: 1.0, 1.25, 1.5, 2.0
  Treble : –12dB to +12dB/2dB step
  fo: 8KHz, 12KHz Q: 1.0
- Built-in Soft MUTE by DC voltage control or serial data control
- 2 line serial bus control

Recommended Operating Conditions

Supply voltage range.....7.0 to 10.0V

Recommended supply voltage 9.0V

Pin Configuration (Top View)

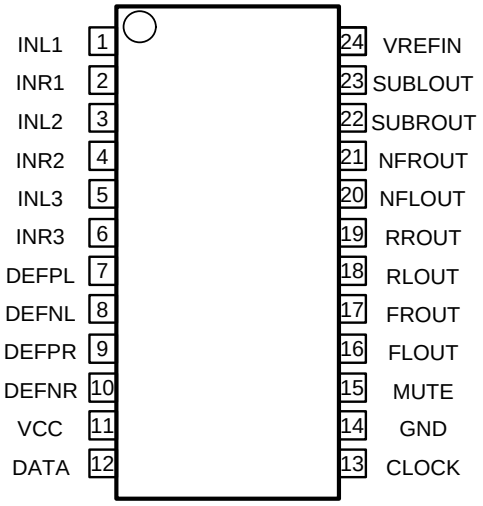

OUTLINE:24PIN SSOP

Application

Car Audio

System Configuration

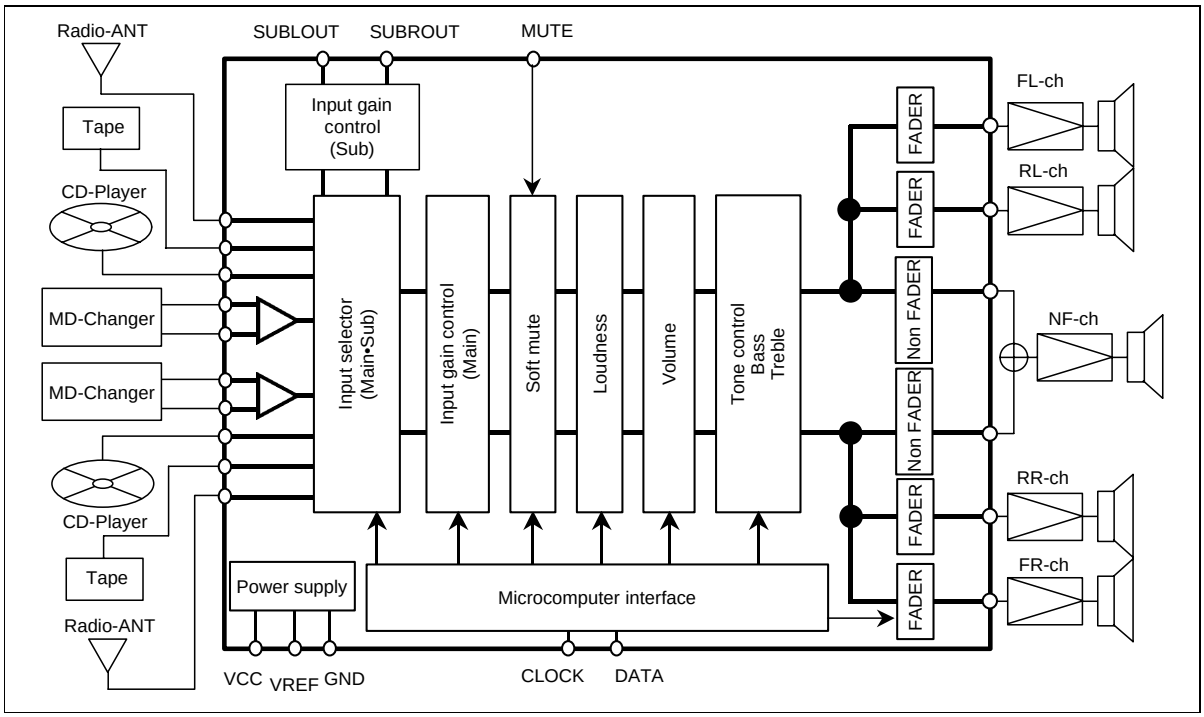

Pin Description

Pin No.	Name	Function
1	INL1	Input pin of L/R channel 1
2	INR1	
3	INL2	Input pin of L/R channel 2
4	INR2	
5	INL3	Input pin of L/R channel 3
6	INR3	
7	DEFPL	Positive input pin of differential amp(L channel)
8	DEFNL	Negative input pin of differential amp (L channel)
9	DEFPR	Positive input pin of differential amp (R channel)
10	DEFNR	Negative input pin of differential amp (R channel)
23	SUBLOUT	Output pin of Sub selector (Lch)
22	SUBROUT	Output pin of Sub selector (Rch)
16	FLOUT	Output pin of FADER volume (FRONT Lch)
17	FROUT	Output pin of FADER volume (FRONT Rch)
18	RLOUT	Output pin of FADER volume (REAR Lch)
19	RROUT	Output pin of FADER volume (REAR Rch)
20	NFLOUT	Output pin of Non FADER volume (REAR Lch)
21	NFROUT	Output pin of Non FADER volume (REAR Rch)
12	DATA	Input pin of Serial DATA
13	CLOCK	Input pin of CLOCK
15	MUTE	Control pin of Soft MUTE
14	GND	Ground pin
11	VCC	Power supply pin
24	VREFIN	Signal ground of IC

Internal Block Diagram (Lch Only)

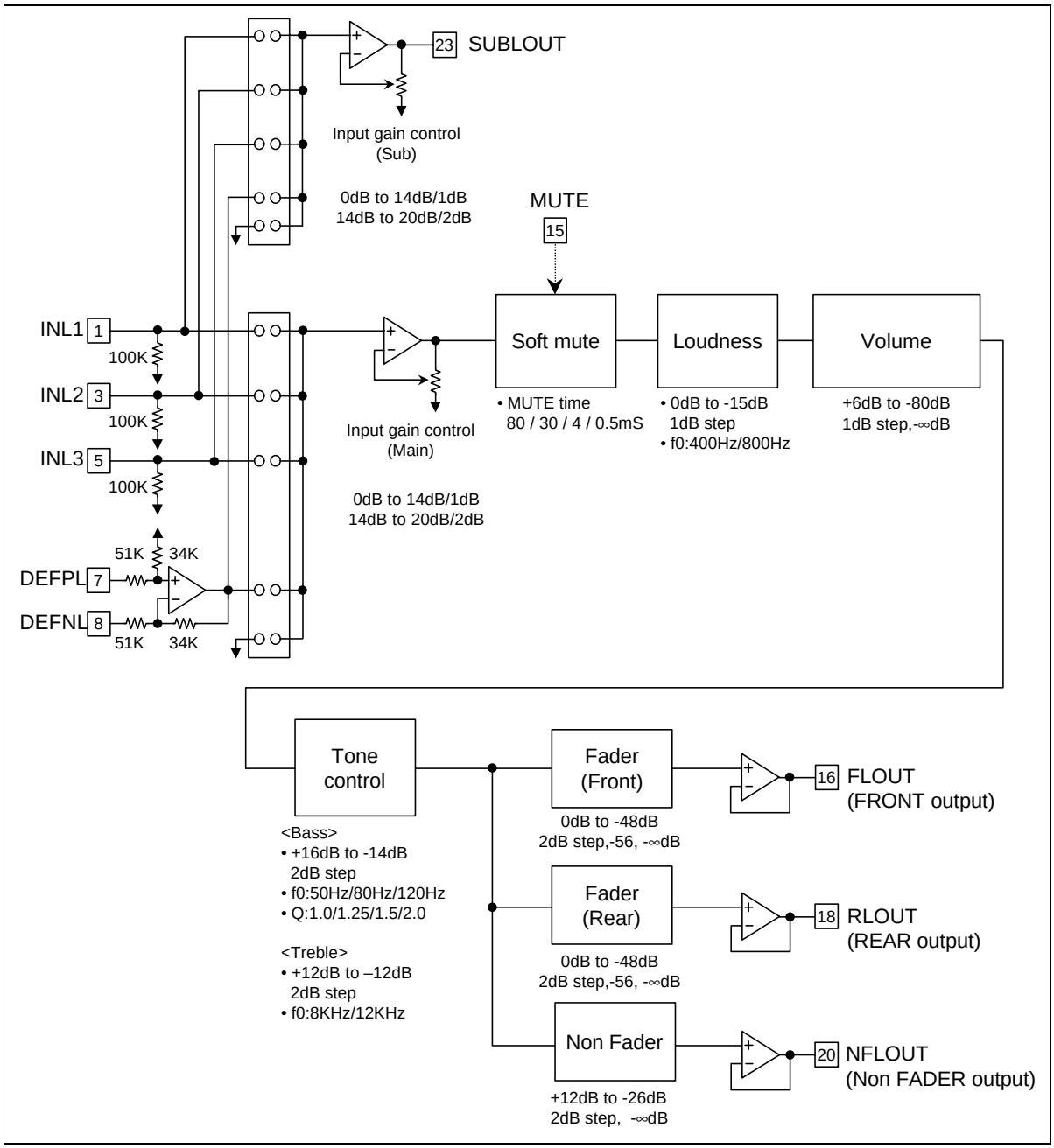

Absolute Maximum Ratings

Symbol	Parameter	Condition	Ratings	Unit
V_{CC}	Power supply		10.5	V
Pd	Power dissipation	Ta ≤ 25°C	1.0	W
K	Thermal derating	Ta > 25°C (Circuit board installation)	10.0	mW/°C
Topr	Operating temperature		–30 to +85	°C
Tstg	Storage temperature		–55 to +125	°C

Recommended Operating Conditions

Symbol	Parameter	Ratings MIN	TYP	MAX	Unit
V_{CC}	Power supply	7.0	9.0	10.0	V
V_{IH}	Logic “H” level input voltage (12,13,15pin)	2.1	—	5.0	
V_{IL}	Logic “H” level input voltage (12,13,15pin)	GND	—	0.7	

Thermal Deratings (Maximum Rating)

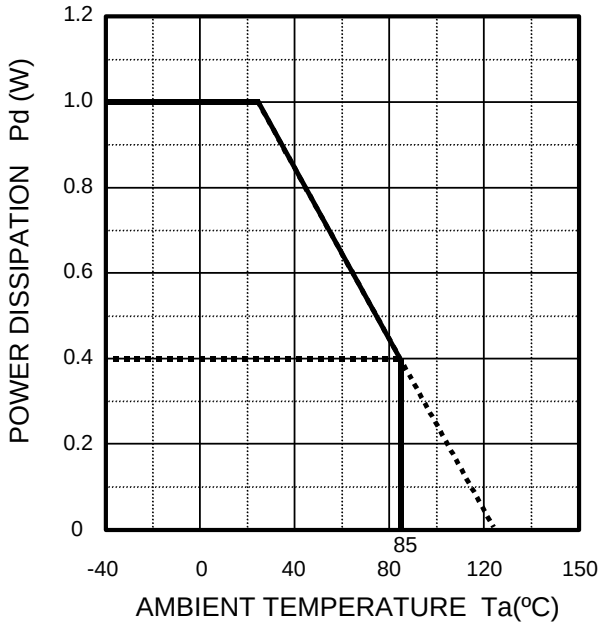

Electical Characteristics

Unless otherwise noted, V_{CC}=9V, Ta=25°C, RL=10KΩ, Input selector : IN1
Vi=1Vrms, f=1KHz, Input gain control/Loudness/Volume/Tone control/FADER/Non FADER=0dB

Symbol	Parameter	Condition	Limits Min	Limits Typ	Limits Max	Unit
Input selector, Input gain control						
Zin	Input resistance	1,2,3,4,5,6pin	50	100	150	kΩ
Sin	Input selector channel separation	DIN-AUDIO Input pin to GND with the capacitance	65	75	—	dB
CMRR	Common mode rejection ratio	7,8pin / 9,10pin DIN-AUDIO At the time of common mode	40	50	—	dB
Vo (differential)	Output voltage of differential amplifier	7,9pin : Vi = 1.5Vrms 8,10pin : Vi = 1.5Vrms (Reverse mode of 7,9pin) } When it is inputted selector : differential input	1.6	2.0	2.4	Vrms
Vi max	Maximum output voltage	400Hz to 30KHz BPF THD=1%	2.0	2.4	—	Vrms
Gv max	Maximum gain	Vi = 0.1Vrms, Gv=20dB	18	20	22	dB
G_{STEP}	Gain step	Gv = 0dB to 14dB	—	1	—	dB
		Gv = 14dB to 20dB	—	2	—	dB
Loudness						
A_{TT} max	Maximum attenuation	f = 10KHz, A_{TT} = –15dB	–17	–15	–13	dB
G_{STEP}	Gain step		—	1	—	dB
Volume						
Gv max	Maximum gain	A_{TT} = +6dB DIN-AUDIO	+4	+6	+8	dB
A_{TT} max	Maximum attenuation	A_{TT} = –∞dB DIN-AUDIO	80	90	—	dB
G_{STEP}	Gain step		—	1	—	dB
ΔA_{TT}	Attenuation error	Gv = 0dB	–2	0	2	dB
Fader						
A_{TT} max	Maximum attenuation	A_{TT} = –∞dB DIN-AUDIO	80	90	—	dB
G_{STEP}	Gain step		—	2	—	dB
ΔA_{TT}	Attenuation error	Gv = 0dB	–2	0	2	dB
Non Fader						
Gv max	Maximum gain	Gv = +12dB DIN-AUDIO	+10	+12	+14	dB
A_{TT} max	Maximum attenuation	A_{TT} = –∞dB DIN-AUDIO	80	90	—	dB
G_{STEP}	Gain step	Gv = +12dB to –26dB	—	2	—	dB

Unless otherwise noted, VCC=9V, Ta=25°C, RL=10KΩ, Input selector : IN1
Vi=1Vrms, f=1KHz, Input gain control/Loudness/Volume/Tone control/FADER/Non FADER=0dB

Symbol	Parameter	Condition	Limits Min	Typ	Max	Unit
Bass						
G(Bass)B	Tone control voltage gain (Boost/Bass)	Vi = 0.1Vrms, f = 120Hz	+14	+16	+18	dB
G(Bass)C	Tone control voltage gain (Cut/Bass)	Vi = 0.5Vrms, f = 120Hz	–16	–14	–12	dB
GSTEP	Gain step		—	2	—	dB
f0	Center frequency	f0 = 50Hz	36.5	50	63.5	Hz
		f0 = 80Hz	58.4	80	101.6	Hz
		f0 = 120Hz	87.6	120	152.4	Hz
Treble						
G(Treble)B	Tone control voltage gain (Boost/Treble)	Vi = 0.1Vrms, f = 12KHz	+10	+12	+14	dB
G(Treble)C	Tone control voltage gain (Cut/Treble)	Vi = 0.5Vrms, f = 12KHz	–14	–12	–10	dB
G_{STEP}	Gain step		—	2	—	dB
f0	Center frequency	f0 = 8KHz	5.8	8	10.2	KHz
		f0 = 12KHz	8.8	12	15.2	KHz
Characteristics						
I_{CC}	Circuit current	No signal	—	40	55	mA
Gv	Pass gain	Vi = 2.0Vrms, 20Hz to 20KHz	–2	0	+2	dB
CS	Channel separation	Input side : Vi = 1Vrms, f = 1KHz Measurement side : Input pin to GND with the capacitance	70	80	—	dB
Vo max	Maximum output voltage	400Hz to 30KHz BPF THD = 1%	2.0	2.4	—	Vrms
THD	Total harmonic distortion	400Hz to 30KHz BPF Vo = 1Vrms, ALL FLAT	—	0.009	0.04	%
Vno	Output noise voltage	DIN-AUDIO, ALL FLAT Input pin to GND with the capacitance	—	12	24	µVrms
		DIN-AUDIO, FADER = –∞dB Input pin to GND with the capacitance	—	3	10	µVrms

Loudness Frequency Characteristics

(note) These characteristics are the simulation result.

Gain control : 0dB to –15dB/1dB step (f0=400Hz)

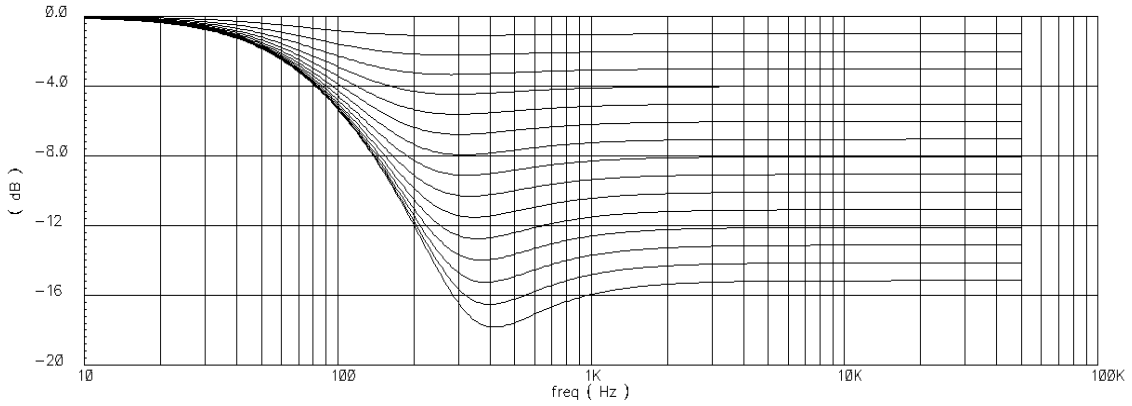

Center frequency : 400Hz / 800Hz (Gv=-15dB)

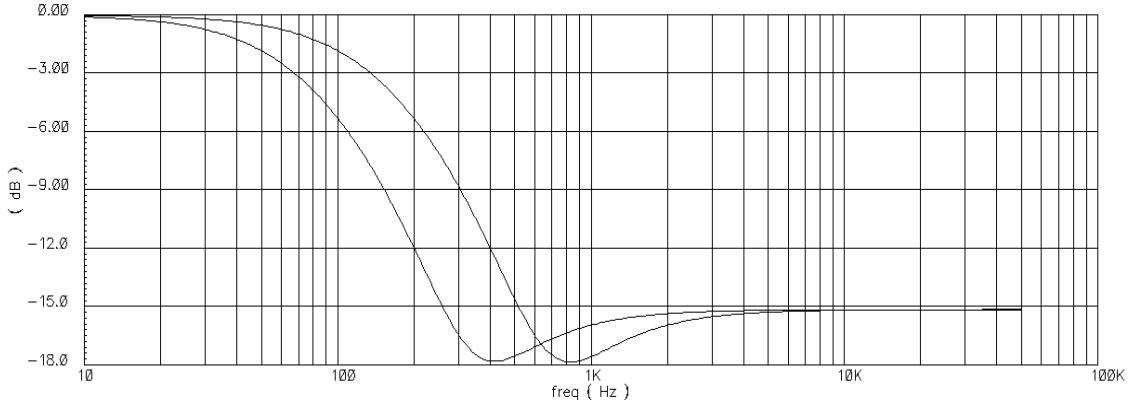

Tone Control Frequency Characteristics

(1) Bass frequency characteristics (These characteristics are the simulation result.)

Gain control : +16dB to –14dB/2dB step (f0=50Hz , Q=1.0)

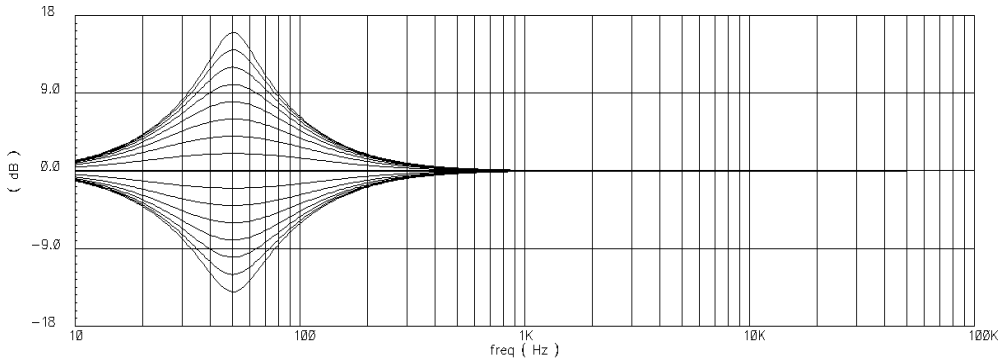

Center frequency : 50Hz / 80Hz / 120Hz (Gv=+16dB , Q=1.0)

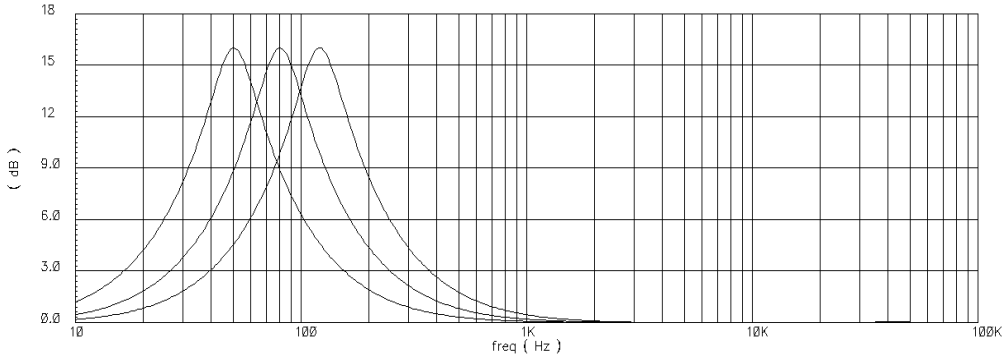

Quality factor : 1.0 / 1.25 / 1.5 / 2.0 (Gv=+16dB , f0=50Hz)

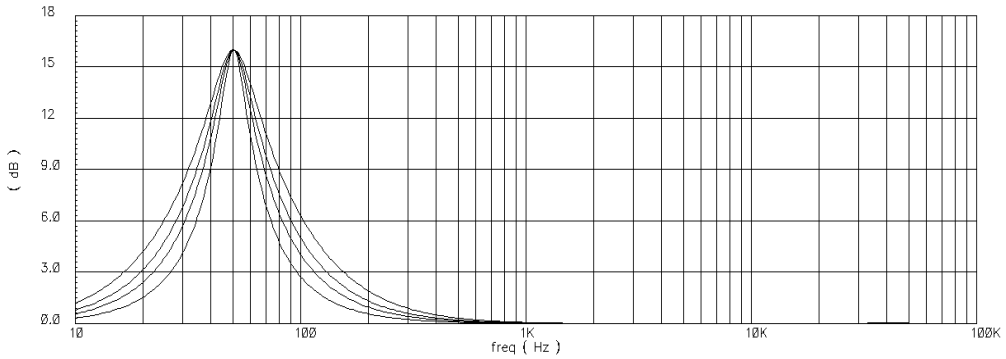

(2) Treble frequency characteristics (These characteristics are the simulation result.)

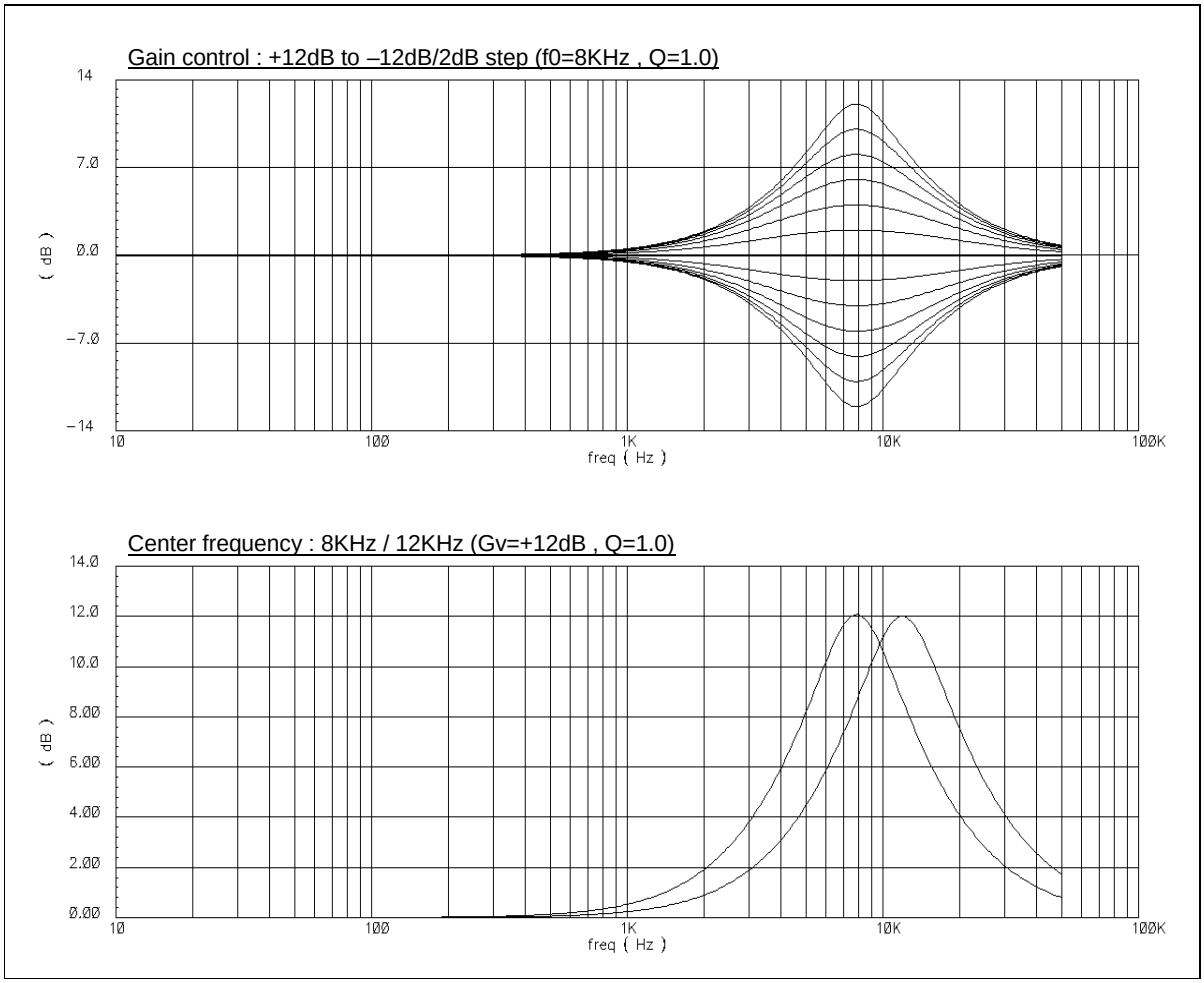

Relationship between Data and Clock

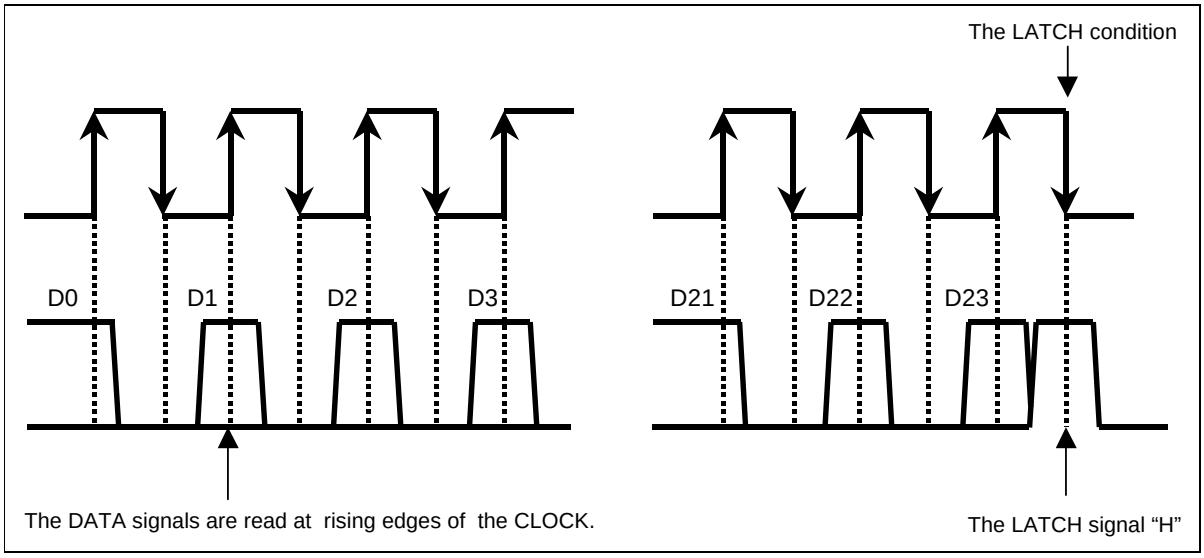

How to transmit DATA.

This IC reads DATA signal at the rising edge of the CLOCK.

When DATA are transmitted, setting up the DATA line is always “L” at the falling edge of the CLOCK.

Power on Reset

This IC builds in the power on reset function.

The voltage of V_{CC} (11 pin) less than 5.0V, the serial DATA can not accept.

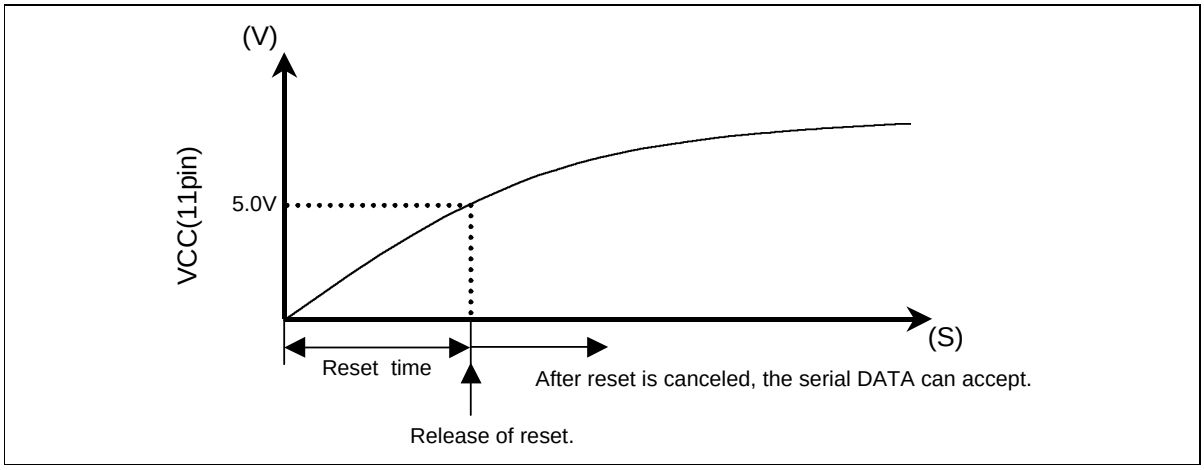

Clock and Data Timing

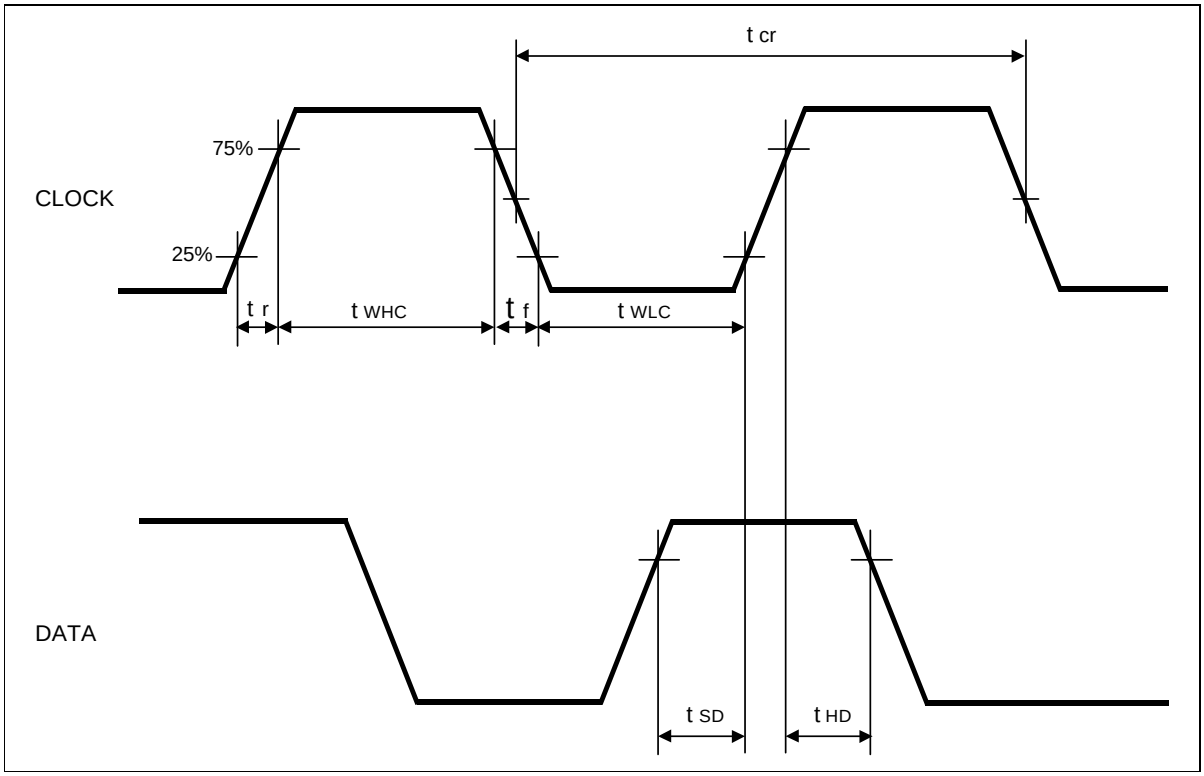

Timing Definition of Digital Block

Symbol	Parameter	Limits Min	Limits Typ	Limits Max	Unit
t_{cr}	CLOCK cycle time	4.0	—	—	µS
t_{WHC}	CLOCK pulse width (“H” level)	1.6	—	—	
t_{WLC}	CLOCK pulse width (“H” level)	1.6	—	—	
t_r	Rising time of CLOCK	—	—	0.4	
t_{SD}	Falling time of CLOCK	—	—	0.4	
t_{HD}	DATA setup time	0.8	—	—	
t_f	DATA hold time	0.8	—	—	

Data Control Specification

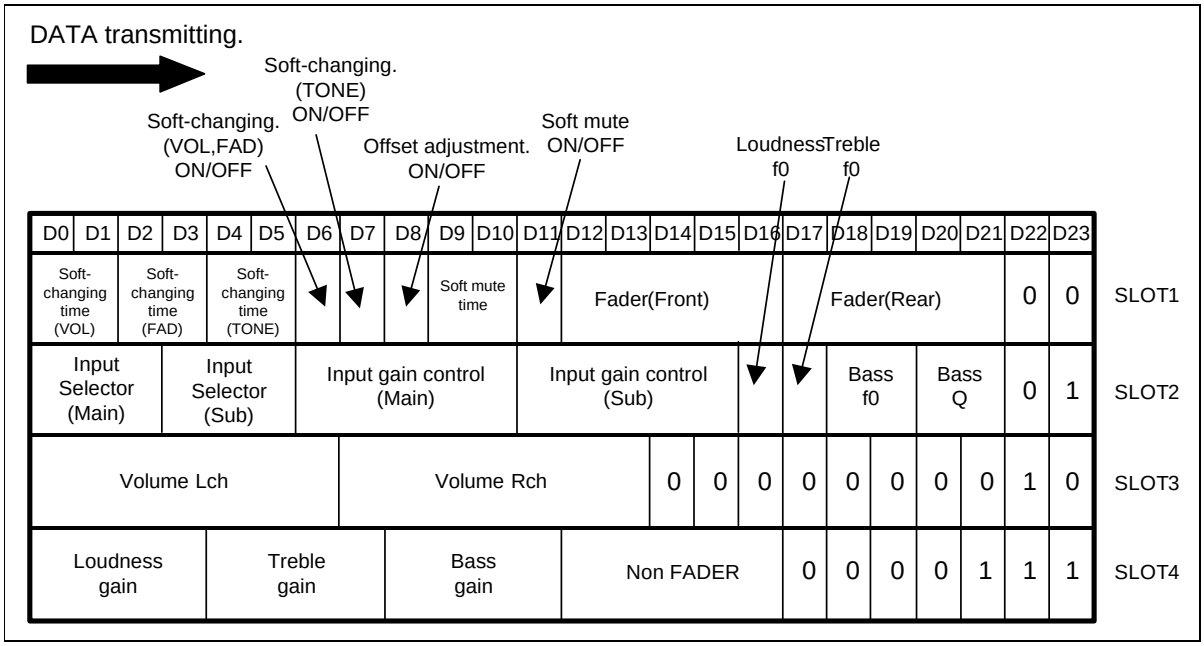

Set-up of an inside in each slot switching as follows.

SLOT1 (D22, D23=0,0) :
- Soft-changing time, Soft-changing ON/OFF, Offset adjustment ON/OFF, Soft mute time
  → Set-up of an inside switching soon after LATCH condition.
- Soft mute ON/OFF
  → After set up at Soft mute time, soft mute ‘ON’ can work.
- Fader (Front,Rear)
  → Set-up of an inside switching slowly at the time when it was set up by Soft-changing time (Fad) after LATCH condition.

SLOT2 (D22, D23=0,1) : Set-up of an inside switching soon after LATCH condition.

SLOT3 (D22, D23=1,0) : Set-up of an inside switching slowly at the time when it was set up by Soft-changing time (VOL) of Slot1 After LATCH condition.
(When Soft-changing(VOL) of the slot 1 is off, A setup of an inside switching soon after LATCH condition.)

SLOT4 (D22, D23=1,1) : Set-up of an inside switching slowly at the time when it was set up by Soft-changing time (TONE) of Slot1 After LATCH condition.
(When Soft-changing (TONE) of the slot 1 is off, A setup of an inside switching soon after LATCH condition.)

(note) Refer to the next page for Soft mute/Soft-changing (VOL, FAD, TONE) in detail.

Soft-Changing

This IC built in the Soft-changing circuit for reduce the step-noise when internal SW changing.

By this function, Switching noise of no-signal and some signals can be reduced.

At the Time of Volume and Fader Changing

The Soft-changing of Volume and Fader can work as follows,

(1) At the time of Soft-changing (VOL, FAD) ON
(2) Volume : At the time of changing in the 1dB or 2dB step.
Fader : At the time of changing in the 2dB step.
(3) After the last Soft-changing (VOL, FAD) is completed.

Soft-changing time (VOL, FAD) can be select for four kinds of the bottom table.

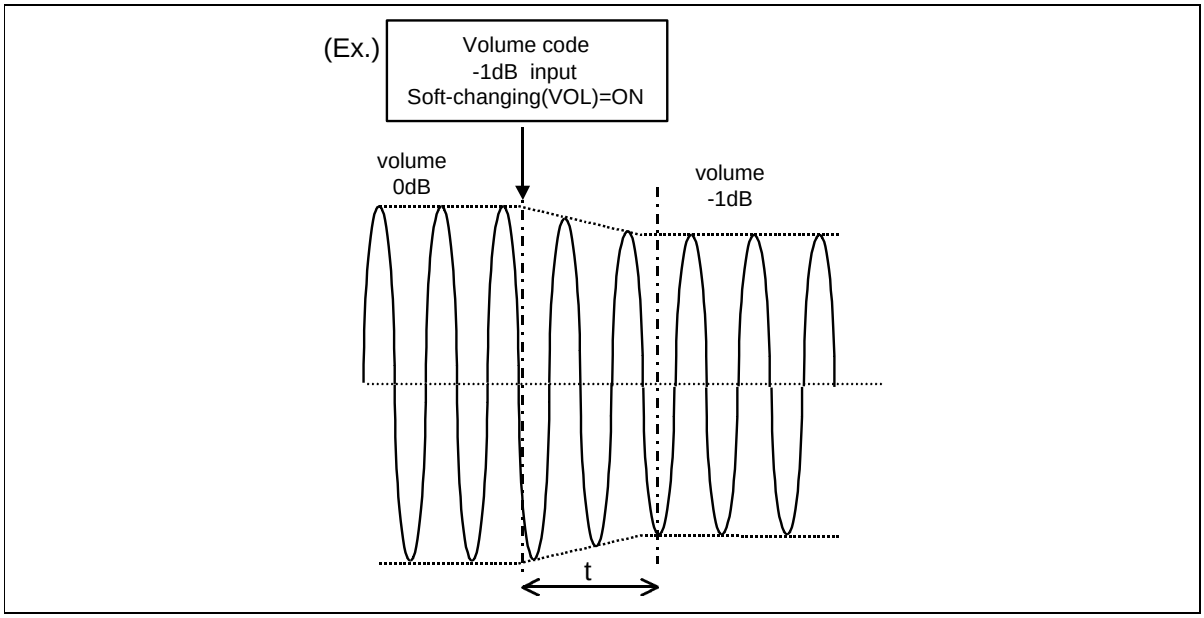

t: Soft-changing time (You can changed by serial DATA.)
Note) Serial DATA isn't accepted during Soft-changing.

Soft Switching Time (Vol)

Time	D0	D1
60ms	1	1
40ms	1	0
20ms	0	1
5ms	0	0

Soft Switching Time (Fad)

Time	D2	D3
100ms	1	1
80ms	1	0
60ms	0	1
40ms	0	0

At the Time of Loudness, Bass, Treble and Non Fader Changing

The Soft-changing of Loudness, Bass, Treble and Non Fader can work as follows,

(1) At the time of Soft-changing (TONE) ON
(2) At the time of step switching.
(3) After the last Soft-changing (TONE) is completed.

Soft-changing time (TONE) can be select for four kinds of the bottom table.

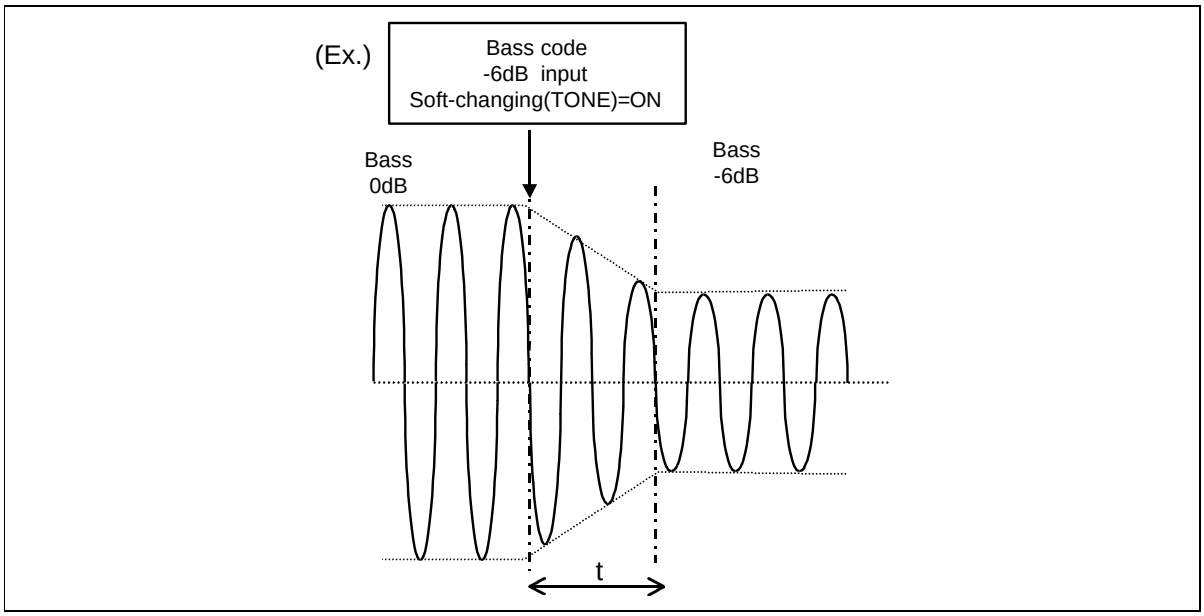

t: Soft-changing time (You can changed by serial DATA.)
Note) Serial DATA isn't accepted during Soft-changing.

Soft Switching Time (Tone)

Time	D4	D5
100ms	1	1
80ms	1	0
60ms	0	1
40ms	0	0

Soft Mute

This IC builds in the Soft Mute function for reduce pop-noise when Mute ON or OFF.

because of pop noise decrease when MUTE/MUTE release moves.

Soft Mute controlled directly with 15 pin (MUTE Pin) or can be controlled by Serial DATA.

Soft Mute time can be changed by Serial DATA as for four kinds (0.5mS/10mS/30mS/80mS) .

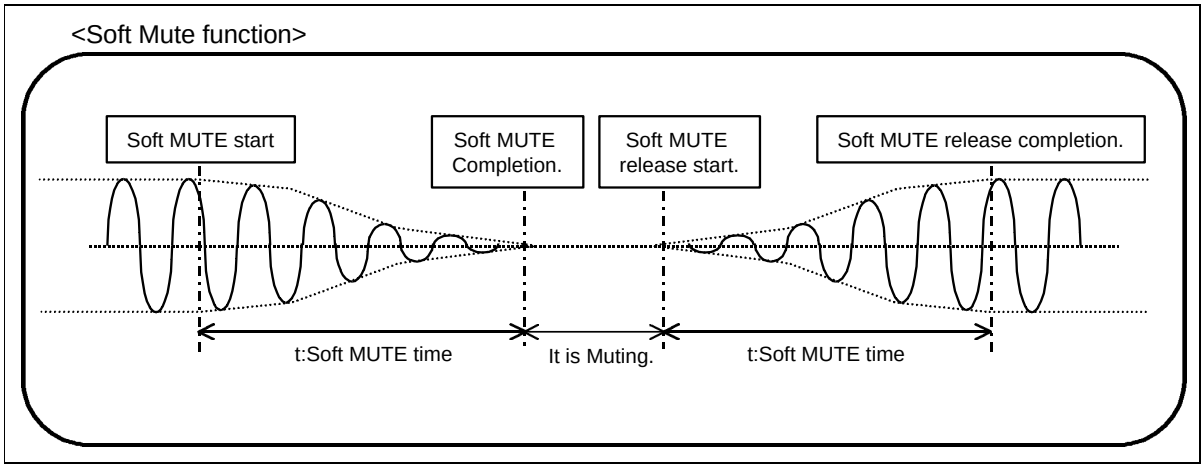

1. Soft Mute controlled by the MUTE pin (15pin).
   Soft Mute → ON: “L level →H level (at the rising edge)”
   Soft Mute → OFF: “H level →L level (at the falling edge)”

MUTE pin (15pin)	IC inside movement
L	Soft MUTE release
L→H	Soft MUTE start
H	MUTE
H→L	Soft MUTE release start

Note) Refer to (page 5) recommend conditions for the L/H threshold voltage.

2. Soft Mute controlled by Serial DATA.
   Soft Mute ON/OFF can be controlled by D11 of the slot 1 DATA input format (page 12).

3. Relations between the MUTE pin (15pin) control and Serial DATA control.
   As for the Soft Mute ON/OFF, it is priority that the rising edge and the falling edge are inputted first 15pin control or Serial DATA control as the bottom figure.
   - Case1 : Mute ON/OFF controlled by 15pin.
   - Case2 : Mute ON/OFF controlled by Serial DATA.
   - Case3 : Mute starting is controlled by 15pin and Mute release is controlled by Serial DATA.
   - Case4 : Mute starting is controlled by Serial DATA and Mute release is controlled by 15pin.

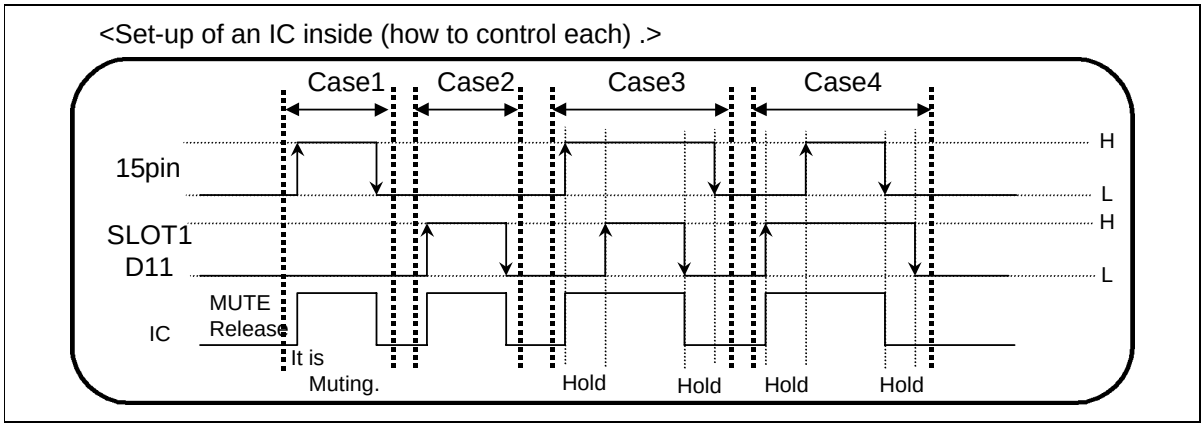

Data Transmission and Relation of the Soft-Changing Time

This IC do not accept next DATA (LATCH condition) until the Soft-changing finished.

(Transmission Slot 1, Slot 3 and Slot 4 of the DATA input format.)

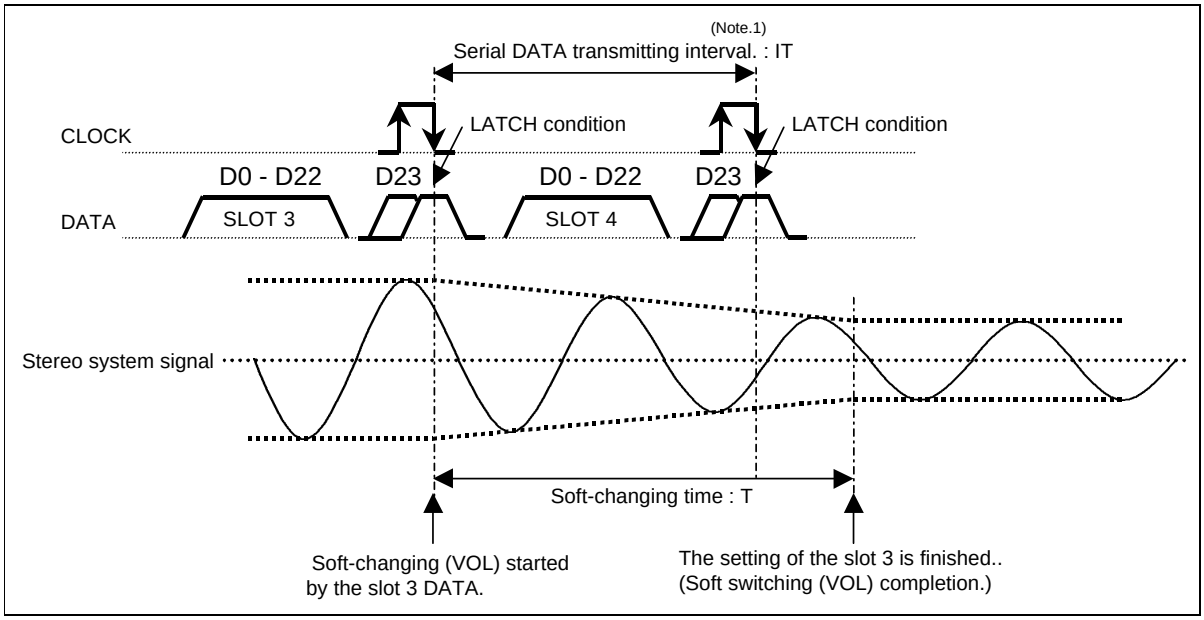

(Note) The slot 4 DATA are ineffective as the upper figure.

In to set the Serial DATA transmitting interval: IT from MCU (microcomputer) to M61523FP.

Serial DATA transmitting interval **: IT** >Soft-changing time **: T**

(The reading error of the DATA does not occur.)

DATA transmitting example

Serial DATA transmitting interval (IT) setting when Soft-changing time (VOL) = 20mS, (FAD) = 60mS, (TONE) = 60mS.

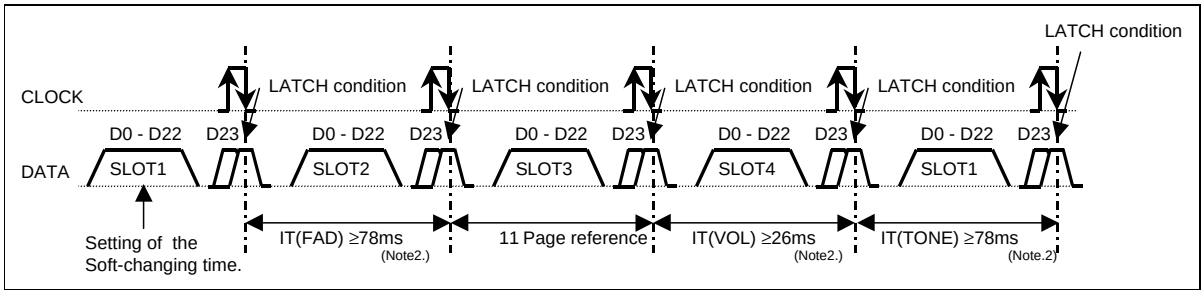

Note1. Serial DATA transmitting interval (IT) =The interval of LATCH condition and LATCH condition.

Note2. IT(FAD) = 60msec + (60msec X 30%), IT(VOL) = 20msec + (20msec X 30%), IT(TONE) = 60msec + (60msec X 30%)

Slot1 Data Code

Soft-changing time (VOL)

Time	D0	D1
60ms	1	1
40ms	1	0
20ms	0	1
● 5ms	0	0

Soft-changing time (FAD)

Time	D2	D3
100ms	1	1
80ms	1	0
60ms	0	1
● 40ms	0	0

Soft-changing time (TONE)

Time	D4	D5
100ms	1	1
80ms	1	0
60ms	0	1
● 40ms	0	0

Soft-changing (VOL,FAD)

Soft changing (VOL,FAD)	D6
ON	1
● OFF *1	0

Soft-changing (TONE)

Soft changing (TONE)	D7
ON	1
● OFF *1	0

Offset adjustment ON/OFF

Offset adjustment	D8
ON	1
● OFF *2	0

Soft MUTE time

Time	D9	D10
80.0ms	1	1
30.0ms	1	0
10.0ms	0	1
● 0.5ms	0	0

Soft MUTE ON/OFF

Soft MUTE	D11
ON	1
● OFF	0

FADER

ATT	FRONT	D12	D13	D14	D15	D16
	REAR	D17	D18	D19	D20	D21
0dB		1	1	0	1	0
-2dB		1	1	0	0	1
-4dB		1	1	0	0	0
-6dB		1	0	1	1	1
-8dB		1	0	1	1	0
-10dB		1	0	1	0	1
-12dB		1	0	1	0	0
-14dB		1	0	0	1	1
-16dB		1	0	0	1	0
-18dB		1	0	0	0	1
-20dB		1	0	0	0	0
-22dB		0	1	1	1	1
-24dB		0	1	1	1	0
-26dB		0	1	1	0	1
-28dB		0	1	1	0	0
-30dB		0	1	0	1	1
-32dB		0	1	0	1	0
-34dB		0	1	0	0	1
-36dB		0	1	0	0	0
-38dB		0	0	1	1	1
-40dB		0	0	1	1	0
-42dB		0	0	1	0	1
-44dB		0	0	1	0	0
-46dB		0	0	0	1	1
-48dB		0	0	0	1	0
-56dB	*3	0	0	0	0	1
● -∞dB		0	0	0	0	0

*1 When soft changing is OFF, FADER changing of slot 1 and each setup of slot 3 and 4 can be switching without changing time.

*2 When Offset adjustment is OFF, an adjustment result right before the front is maintained.

*3 Soft changing circuit doesn't work at FADER changing –48dB ←→ –56dB (Because changing step is beyond 2dB).
Please refer page 13.

Note.) Offset adjustment function is only a main-signal., the sub-signal isn't built in.

● It is initial setting when power supply turn on.

Note) Don't transmit designated outside data.

Slot2 Data Code

Input gain control

Gain	Main	D6	D7	D8	D9	D10
	Sub	D11	D12	D13	D14	D15
+20dB		1	0	0	0	1
+18dB		1	0	0	0	0
+16dB		0	1	1	1	1
+14dB		0	1	1	1	0
+13dB		0	1	1	0	1
+12dB		0	1	1	0	0
+11dB		0	1	0	1	1
+10dB		0	1	0	1	0
+9dB		0	1	0	0	1
+8dB		0	1	0	0	0
+7dB		0	0	1	1	1
+6dB		0	0	1	1	0
+5dB		0	0	1	0	1
+4dB		0	0	1	0	0
+3dB		0	0	0	1	1
+2dB		0	0	0	1	0
+1dB		0	0	0	0	1
● 0dB		0	0	0	0	0

Input selector

Selector	Main	D0	D1	D2
	Sub	D3	D4	D5
IN1		1	0	0
IN2		0	1	1
IN3		0	1	0
Differential input		0	0	1
● MUTE		0	0	0

Loudness f0

f0	D16
800Hz	1
● 400Hz	0

Treble f0

f0	D17
12KHz	1
● 8KHz	0

Bass f0

f0	D18	D19
120Hz	1	0
80Hz	0	1
● 50Hz	0	0

Bass Q

Q	D20	D21
2.0	1	1
1.5	1	0
1.25	0	1
● 1.0	0	0

● It is initial setting when power supply turn on.

Slot3 Data Code

Volume

ATT	Lch / Rch	D0 / D7	D1 / D8	D2 / D9	D3 / D10	D4 / D11	D5 / D12	D6 / D13
+6dB		1	0	1	0	1	1	1
+5dB		1	0	1	0	1	1	0
+4dB		1	0	1	0	1	0	1
+3dB		1	0	1	0	1	0	0
+2dB		1	0	1	0	0	1	1
+1dB		1	0	1	0	0	1	0
0dB		1	0	1	0	0	0	1
-1dB		1	0	1	0	0	0	0
-2dB		1	0	0	1	1	1	1
-3dB		1	0	0	1	1	1	0
-4dB		1	0	0	1	1	0	1
-5dB		1	0	0	1	1	0	0
-6dB		1	0	0	1	0	1	1
-7dB		1	0	0	1	0	1	0
-8dB		1	0	0	1	0	0	1
-9dB		1	0	0	1	0	0	0
-10dB		1	0	0	0	1	1	1
-11dB		1	0	0	0	1	1	0
-12dB		1	0	0	0	1	0	1
-13dB		1	0	0	0	1	0	0
-14dB		1	0	0	0	0	1	1
-15dB		1	0	0	0	0	1	0
-16dB		1	0	0	0	0	0	1
-17dB		1	0	0	0	0	0	0
-18dB		0	1	1	1	1	1	1
-19dB		0	1	1	1	1	1	0
-20dB		0	1	1	1	1	0	1
-21dB		0	1	1	1	1	0	0
-22dB		0	1	1	1	0	1	1
-23dB		0	1	1	1	0	1	0
-24dB		0	1	1	1	0	0	1
-25dB		0	1	1	1	0	0	0
-26dB		0	1	1	0	1	1	1
-27dB		0	1	1	0	1	1	0
-28dB		0	1	1	0	1	0	1
-29dB		0	1	1	0	1	0	0
-30dB		0	1	1	0	0	1	1
-31dB		0	1	1	0	0	1	0
-32dB		0	1	1	0	0	0	1
-33dB		0	1	1	0	0	0	0
-34dB		0	1	0	1	1	1	1
-35dB		0	1	0	1	1	1	0
-36dB		0	1	0	1	1	0	1
-37dB		0	1	0	1	1	0	0

ATT	Lch / Rch	D0 / D7	D1 / D8	D2 / D9	D3 / D10	D4 / D11	D5 / D12	D6 / D13
-38dB		0	1	0	1	0	1	1
-39dB		0	1	0	1	0	1	0
-40dB		0	1	0	1	0	0	1
-41dB		0	1	0	1	0	0	0
-42dB		0	1	0	0	1	1	1
-43dB		0	1	0	0	1	1	0
-44dB		0	1	0	0	1	0	1
-45dB		0	1	0	0	1	0	0
-46dB		0	1	0	0	0	1	1
-47dB		0	1	0	0	0	1	0
-48dB		0	1	0	0	0	0	1
-49dB		0	1	0	0	0	0	0
-50dB		0	0	1	1	1	1	1
-51dB		0	0	1	1	1	1	0
-52dB		0	0	1	1	1	0	1
-53dB		0	0	1	1	1	0	0
-54dB		0	0	1	1	0	1	1
-55dB		0	0	1	1	0	1	0
-56dB		0	0	1	1	0	0	1
-57dB		0	0	1	1	0	0	0
-58dB		0	0	1	0	1	1	1
-59dB		0	0	1	0	1	1	0
-60dB		0	0	1	0	1	0	1
-61dB		0	0	1	0	1	0	0
-62dB		0	0	1	0	0	1	1
-63dB		0	0	1	0	0	1	0
-64dB		0	0	1	0	0	0	1
-65dB		0	0	1	0	0	0	0
-66dB		0	0	0	1	1	1	1
-67dB		0	0	0	1	1	1	0
-68dB		0	0	0	1	1	0	1
-69dB		0	0	0	1	1	0	0
-70dB		0	0	0	1	0	1	1
-71dB		0	0	0	1	0	1	0
-72dB		0	0	0	1	0	0	1
-73dB		0	0	0	1	0	0	0
-74dB		0	0	0	0	1	1	1
-75dB		0	0	0	0	1	1	0
-76dB		0	0	0	0	1	0	1
-77dB		0	0	0	0	1	0	0
-78dB		0	0	0	0	0	1	1
-79dB		0	0	0	0	0	1	0
-80dB		0	0	0	0	0	0	1
● -∞dB		0	0	0	0	0	0	0

● It is initial setting when power supply turn on.

Slot4 Data Code

Loudness gain

Gv	D0	D1	D2	D3
● 0dB	1	1	1	1
-1dB	1	1	1	0
-2dB	1	1	0	1
-3dB	1	1	0	0
-4dB	1	0	1	1
-5dB	1	0	1	0
-6dB	1	0	0	1
-7dB	1	0	0	0
-8dB	0	1	1	1
-9dB	0	1	1	0
-10dB	0	1	0	1
-11dB	0	1	0	0
-12dB	0	0	1	1
-13dB	0	0	1	0
-14dB	0	0	0	1
-15dB	0	0	0	0

Treble gain

Gv	D4	D5	D6	D7
+12dB	1	1	1	0
+10dB	1	1	0	1
+8dB	1	1	0	0
+6dB	1	0	1	1
+4dB	1	0	1	0
+2dB	1	0	0	1
● 0dB	0	0	0	0
-2dB	0	0	0	1
-4dB	0	0	1	0
-6dB	0	0	1	1
-8dB	0	1	0	0
-10dB	0	1	0	1
-12dB	0	1	1	0

Bass gain

Gv	D8	D9	D10	D11
+16dB	1	0	0	0
+14dB	1	1	1	1
+12dB	1	1	1	0
+10dB	1	1	0	1
+8dB	1	1	0	0
+6dB	1	0	1	1
+4dB	1	0	1	0
+2dB	1	0	0	1
● 0dB	0	0	0	0
-2dB	0	0	0	1
-4dB	0	0	1	0
-6dB	0	0	1	1
-8dB	0	1	0	0
-10dB	0	1	0	1
-12dB	0	1	1	0
-14dB	0	1	1	1

Non FADER

Gv	D12	D13	D14	D15	D16
+12dB	1	0	1	1	0
+10dB	1	0	1	0	1
+8dB	1	0	1	0	0
+6dB	1	0	0	1	1
+4dB	1	0	0	1	0
+2dB	1	0	0	0	1
● 0dB	0	0	0	0	0
-2dB	0	0	0	0	1
-4dB	0	0	0	1	0
-6dB	0	0	0	1	1
-8dB	0	0	1	0	0
-10dB	0	0	1	0	1
-12dB	0	0	1	1	0
-14dB	0	0	1	1	1
-16dB	0	1	0	0	0
-18dB	0	1	0	0	1
-20dB	0	1	0	1	0
-22dB	0	1	0	1	1
-24dB	0	1	1	0	0
-26dB	0	1	1	0	1
-∞dB	0	1	1	1	0

● It is initial setting when power supply turn on.

Application Example

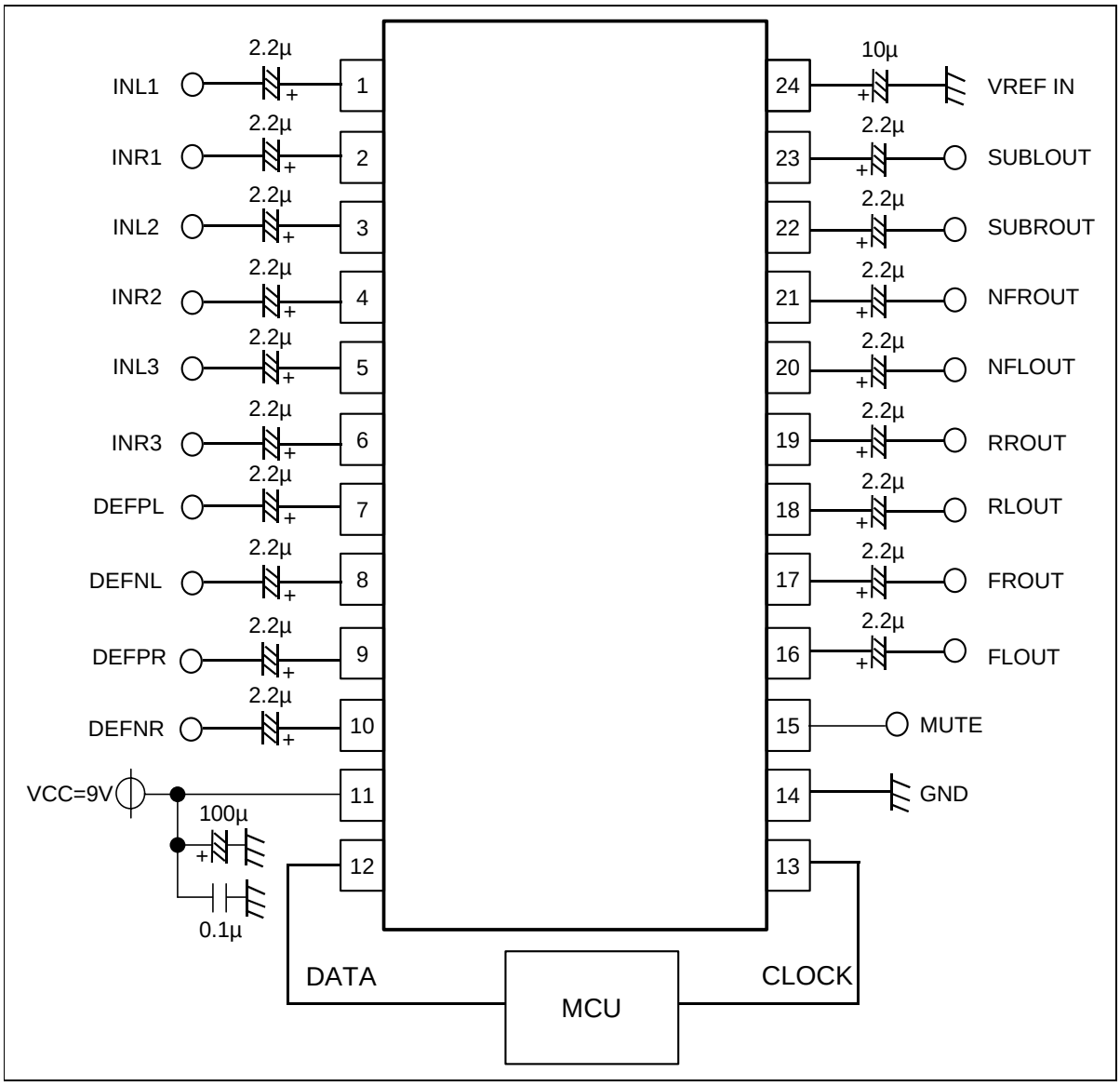

Detailed Diagram Of Package Outline

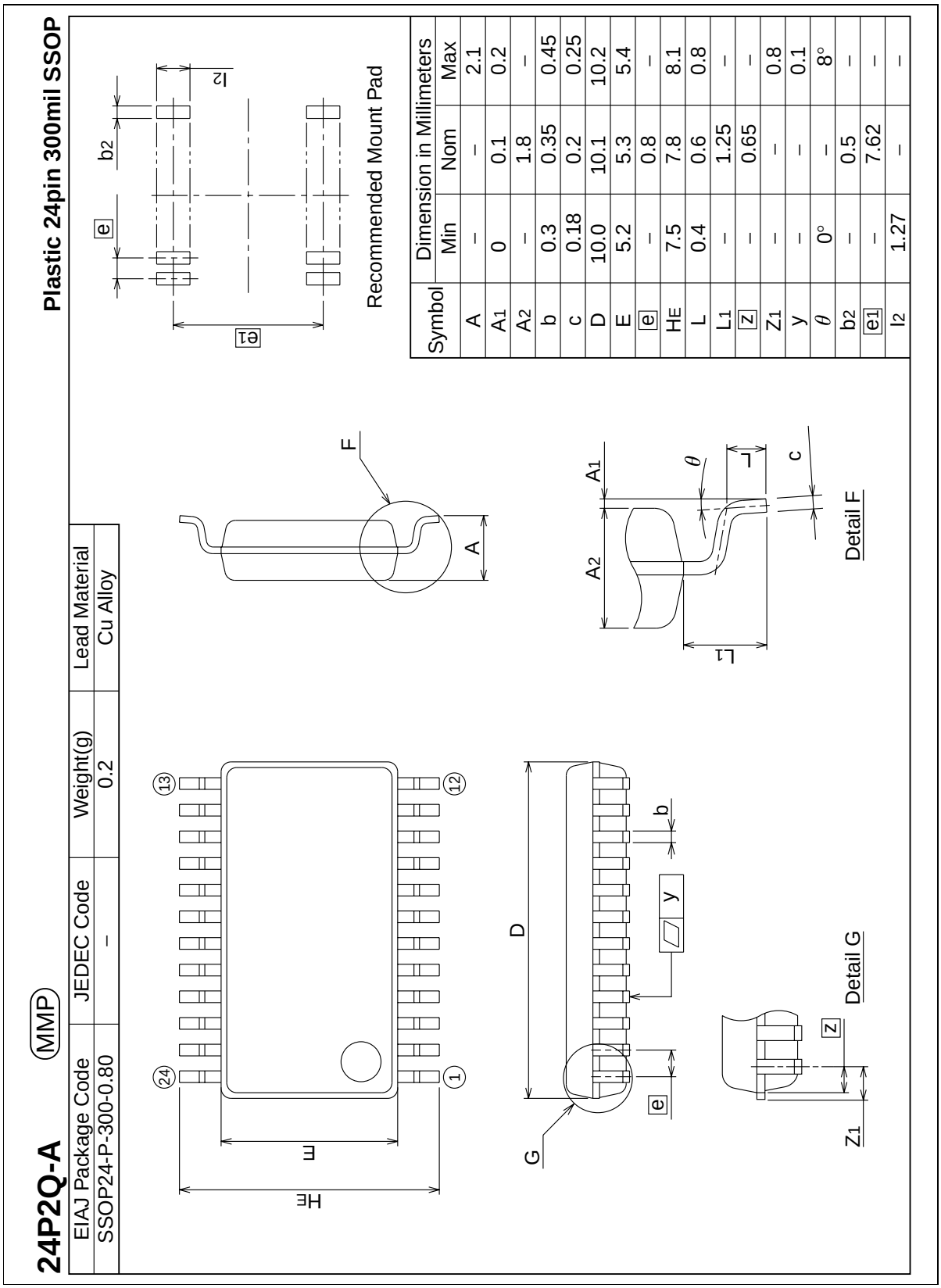

Symbol	Dimension in Millimeters		
	Min	Nom	Max
A	–	–	2.1
A_1	0	0.1	0.2
A_2	–	1.8	–
b	0.3	0.35	0.45
c	0.18	0.2	0.25
D	10.0	10.1	10.2
E	5.2	5.3	5.4
e	–	0.8	–
H_E	7.5	7.8	8.1
L	0.4	0.6	0.8
L_1	–	1.25	–
z	–	0.65	–
Z_1	–	–	0.8
y	–	–	0.1
θ	0°	–	8°
b_2	–	0.5	–
e_1	–	7.62	–
l_2	1.27	–	–

Renesas Technology Corp. Sales Strategic Planning Div. Nippon Bldg., 2-6-2, Ohte-machi, Chiyoda-ku, Tokyo 100-0004, Japan

Keep safety first in your circuit designs!
1. Renesas Technology Corp. puts the maximum effort into making semiconductor products better and more reliable, but there is always the possibility that trouble may occur with them. Trouble with semiconductors may lead to personal injury, fire or property damage.
Remember to give due consideration to safety when making your circuit designs, with appropriate measures such as (i) placement of substitutive, auxiliary circuits, (ii) use of nonflammable material or (iii) prevention against any malfunction or mishap.

Notes regarding these materials
1. These materials are intended as a reference to assist our customers in the selection of the Renesas Technology Corp. product best suited to the customer's application; they do not convey any license under any intellectual property rights, or any other rights, belonging to Renesas Technology Corp. or a third party.
2. Renesas Technology Corp. assumes no responsibility for any damage, or infringement of any third-party's rights, originating in the use of any product data, diagrams, charts, programs, algorithms, or circuit application examples contained in these materials.
3. All information contained in these materials, including product data, diagrams, charts, programs and algorithms represents information on products at the time of publication of these materials, and are subject to change by Renesas Technology Corp. without notice due to product improvements or other reasons. It is therefore recommended that customers contact Renesas Technology Corp. or an authorized Renesas Technology Corp. product distributor for the latest product information before purchasing a product listed herein.
The information described here may contain technical inaccuracies or typographical errors.
Renesas Technology Corp. assumes no responsibility for any damage, liability, or other loss rising from these inaccuracies or errors.
Please also pay attention to information published by Renesas Technology Corp. by various means, including the Renesas Technology Corp. Semiconductor home page (http://www.renesas.com).
4. When using any or all of the information contained in these materials, including product data, diagrams, charts, programs, and algorithms, please be sure to evaluate all information as a total system before making a final decision on the applicability of the information and products. Renesas Technology Corp. assumes no responsibility for any damage, liability or other loss resulting from the information contained herein.
5. Renesas Technology Corp. semiconductors are not designed or manufactured for use in a device or system that is used under circumstances in which human life is potentially at stake. Please contact Renesas Technology Corp. or an authorized Renesas Technology Corp. product distributor when considering the use of a product contained herein for any specific purposes, such as apparatus or systems for transportation, vehicular, medical, aerospace, nuclear, or undersea repeater use.
6. The prior written approval of Renesas Technology Corp. is necessary to reprint or reproduce in whole or in part these materials.
7. If these products or technologies are subject to the Japanese export control restrictions, they must be exported under a license from the Japanese government and cannot be imported into a country other than the approved destination.
Any diversion or reexport contrary to the export control laws and regulations of Japan and/or the country of destination is prohibited.
8. Please contact Renesas Technology Corp. for further details on these materials or the products contained therein.

RENESAS

RENESAS SALES OFFICES

http://www.renesas.com

Renesas Technology America, Inc.
450 Holger Way, San Jose, CA 95134-1368, U.S.A
Tel: <1> (408) 382-7500 Fax: <1> (408) 382-7501

Renesas Technology Europe Limited.
Dukes Meadow, Millboard Road, Bourne End, Buckinghamshire, SL8 5FH, United Kingdom
Tel: <44> (1628) 585 100, Fax: <44> (1628) 585 900

Renesas Technology Europe GmbH
Dornacher Str. 3, D-85622 Feldkirchen, Germany
Tel: <49> (89) 380 70 0, Fax: <49> (89) 929 30 11

Renesas Technology Hong Kong Ltd.
7/F., North Tower, World Finance Centre, Harbour City, Canton Road, Hong Kong
Tel: <852> 2265-6688, Fax: <852> 2375-6836

Renesas Technology Taiwan Co., Ltd.
FL 10, #99, Fu-Hsing N. Rd., Taipei, Taiwan
Tel: <886> (2) 2715-2888, Fax: <886> (2) 2713-2999

Renesas Technology (Shanghai) Co., Ltd.
26/F., Ruijin Building, No.205 Maoming Road (S), Shanghai 200020, China
Tel: <86> (21) 6472-1001, Fax: <86> (21) 6415-2952

Renesas Technology Singapore Pte. Ltd.
1, Harbour Front Avenue, #06-10, Keppel Bay Tower, Singapore 098632
Tel: <65> 6213-0200, Fax: <65> 6278-8001

© 2003. Renesas Technology Corp., All rights reserved. Printed in Japan.
Colophon 1.0