Surface Mount Voltage Controlled Oscillator PCS 1650 - 1750 MHz

MLO81100-01700

V1.00

Features

- Miniature Size
- Surface Mount Package
- Electrically Shielded
- Low Phase Noise
- Highly Linear Tuning

Description

The MLO81100-01700 is a fundamental single ended oscillator designed for use in cost sensitive wireless and telemetry applications. The device has been optimised by careful selection of the bipolar transistor and varactor diode for low phase noise and highly linear tuning characteristics.

The low profile surface mount package used provides for electrical shielding, ease of assembly and repeatable performance. M/A-COM's surface mount manufacturing techniques together with automated assembly and electrical testing ensure a high degree of electrical and mechanical repeatability at low cost and in high volume. Manufacturing is carried out in an ISO 9000 qualified facility.

LSM1 Package

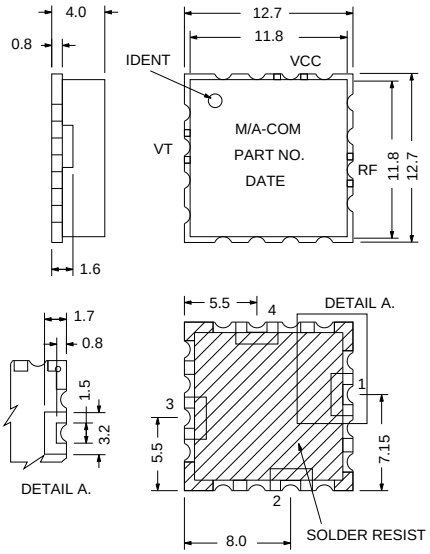

Electrical Specifications[1], T_A = +25°C, V_{CC} = +5V (unless otherwise stated)

Parameter	Test Conditions	Units	Min.	Typ.	Max.
Frequency Range		MHz	1650		1750
Tuning Voltage (V_T)[2]		V	+0.5		+4.5
RF Output Power[3]	1650 - 1750 MHz	dBm	-2.0		+2.0
Supply Voltage (V_{CC})[4]		V	+4.75	+5.00	+5.25
Supply Current (I_{CC})		mA			15
Phase Noise[5]	SSB at 100 KHz offset from carrier	dBc/Hz		-120	-116
Tuning Sensitivity	1650 - 1750 MHz	MHz/V		40	
Tuning Linearity	1650 - 1750 MHz	Ratio		1.5	2.0
Modulation Bandwidth	3 dB bandwidth	MHz	10		
Harmonic Outputs[6]		dBc			-15
Frequency Pushing	V_{CC} 4.75V to 5.25V	MHz/V			3.0
Frequency Pulling	1.5:1 VSWR load, all phases	MHz			5.0
Frequency Drift		MHz/°C		0.15	
Tune Input Capacitance		pF			50

1. All specifications apply with a 50 ohm load impedance.
2. Tuning voltages shown are the minimum and maximum voltages required to tune the frequency range including temperature effects -20°C to +70°C. Devices will oscillate normally with tuning voltages from 0V to +10V.
3. Output power window includes unit to unit variation, temperature effects -20°C to +70°C and frequency flatness (typically ±0.5 dB at any constant temperature).
4. Devices may be operated at lower supply voltage with reduced performance.
5. For typical phase noise at other offsets see phase noise curve.
6. No non harmonic spurious visible when measured on a test system with a dynamic range of 70 dB.

North America: Tel. (800) 366-2266 Fax (800) 618-8883 ■ Asia/Pacific: Tel. +81 (03) 3226-1671 Fax +81 (03) 3226-1451 ■ Europe: Tel. +44 (1344) 869 595 Fax +44 (1344) 300 020

Absolute Maximum Ratings[1]

Parameter	Absolute Maximum
Tuning Voltage(V_T)	0 to +15V
Supply Voltage[2] (V_{CC})	+6V
Storage Temperature	-45°C to +100°C
Solder Assembly Temperature	+230°C for 10 secs.

1. Exceeding these limits may cause permanent damage.
2. A series resistor will allow operation at any greater supply voltage. Used in conjunction with a bypass capacitor this will yield improved power supply decoupling and noise suppression.

Functional Configuration

Pad	Configuration
1	RF Output
2	V_{CC}
3	V_T
4	N/C or Ground
Case/Lid	Ground

Substrate Material FR4.

Environmental Specification

Devices are designed to operate over the temperature range of -20°C to +70°C and after exposure to the shock, vibration, thermal shock and moisture conditions typically encountered in base station and subscriber terminal environments.

Typical Performance @ +25°C

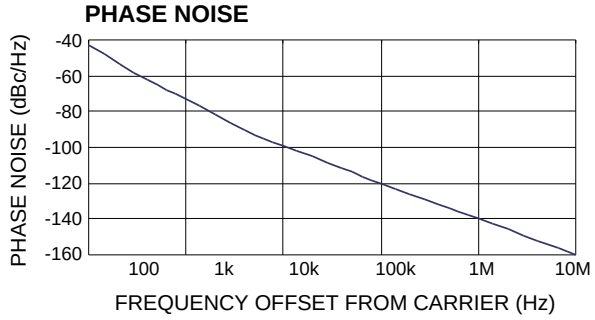

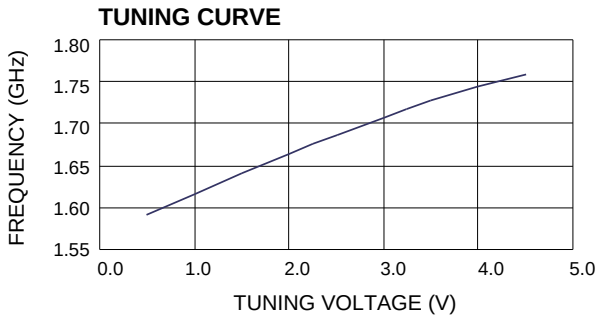

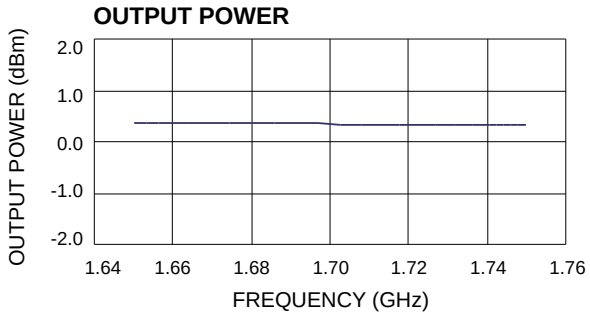

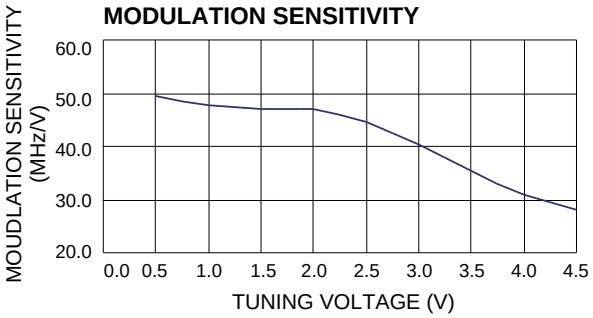

North America: Tel. (800) 366-2266 Fax (800) 618-8883 ■ Asia/Pacific: Tel. +81 (03) 3226-1671 Fax +81 (03) 3226-1451 ■ Europe: Tel. +44 (1344) 869 595 Fax +44 (1344) 300 020