RF2420

PROGRAMMABLE ATTENUATOR

Typical Applications

- Power Control in Communication Systems
- CMOS Compatible Programmable Attenuators
- Commercial and Consumer Systems
- Portable Battery-Powered Equipment

Product Description

The RF2420 is a multistage monolithic programmable attenuator. The device is built using an advanced Gallium Arsenide process technology and has an attenuation programmability over a 44dB range in 2dB steps. The attenuation is set by five bits of digital data. The input and output of the device have a low VSWR 50Ω match. This unit is intended for use in systems that require RF transmit power control by digital means. Typical applications are in dual mode IS-54/55 compatible cellular transceivers and TETRA systems. No negative supply voltages are required.

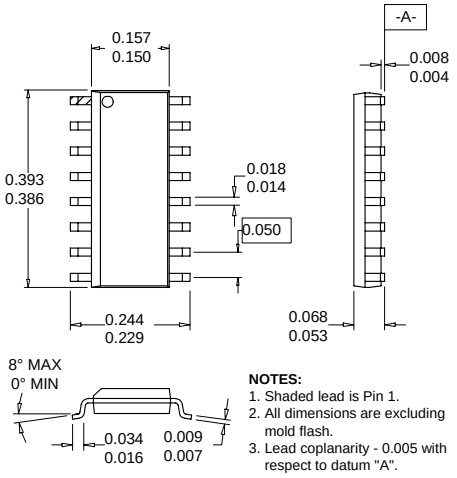

Package Style: SOIC-16

Optimum Technology Matching® Applied

- ☐ Si BJT
- ☐ GaAs HBT
- ☑ GaAs MESFET
- ☐ Si Bi-CMOS
- ☐ SiGe HBT
- ☐ Si CMOS

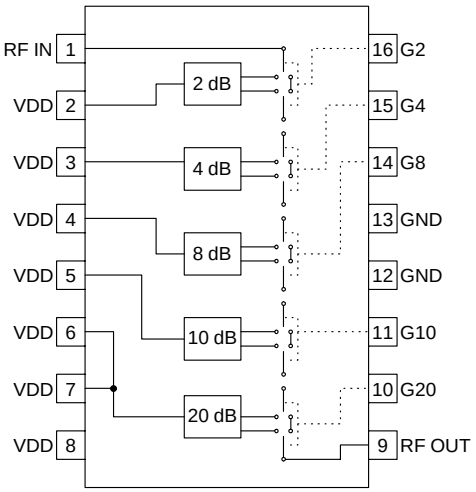

Functional Block Diagram

Features

- Single 3V to 6V Supply
- 0dB to 44dB Attenuation Range
- 4dB Insertion Loss
- 5-bit Digitally Controlled Attenuation
- Digitally Controlled Power Down Mode
- DC to 950MHz Frequency Range

Ordering Information

RF2420	Programmable Attenuator
RF2420 PCBA	Fully Assembled Evaluation Board

RF Micro Devices, Inc.
7628 Thorndike Road
Greensboro, NC 27409, USA
Tel (336) 664 1233
Fax (336) 664 0454
http://www.rfmd.com

Absolute Maximum Ratings

Parameter	Rating	Unit
Supply Voltage	-0.5 to +7.0	V_{DC}
RF Input Power	+17	dBm
Operating Ambient Temperature	-40 to +85	°C
Storage Temperature	-40 to +150	°C

Caution! ESD sensitive device.

RF Micro Devices believes the furnished information is correct and accurate at the time of this printing. However, RF Micro Devices reserves the right to make changes to its products without notice. RF Micro Devices does not assume responsibility for the use of the described product(s).

Parameter	Specification			Unit	Condition
	Min.	Typ.	Max.		
Overall					T=25°C and 5V at 420MHz
Frequency Range		DC to 950		MHz	Tuning of bypass capacitors is required for shifting the center frequency. See the evaluation board schematic for details.
Insertion Loss		4	6	dB	
Attenuation Range		0 to 44		dB	
Gain Flatness			3	dB	In any 50MHz band, at max attenuation
3dB Bandwidth		500		MHz	At 26dB attenuation
		50		MHz	At maximum attenuation
Input					
Input Impedance		50		Ω	
Input VSWR		1.2:1	1.5:1		
Input 1dB Compression	+13	+15		dBm	
Attenuation					
Attenuation Settings	2, 4, 8, 10, 20			dB	CMOS Level, 5 bits
Accuracy			±0.5	dB	2dB step
			±1.0	dB	4dB through 20dB steps
Attenuation Control					
Attenuation “ON” Voltage	2.5	V_{DD}		V	Voltage Supplied to input
Attenuation “OFF” Voltage			0.3	V	Voltage Supplied to input
Current		0.4	1.0	mA	Into each control line
Response Time		<10		ns	
Output					
IM3	-30			dBc	With 0dBm output in each of 2 tones
Harmonic Output	-40			dBc	
Output Impedance		50		Ω	
Output VSWR		1.2:1	1.5:1		
Power Supply					
Voltage		5		V	Specifications
		3 to 6		V	Operating Limits
Current		4	8	mA	Operating
		0.4	0.75	mA	Power Down

Pin	Function	Description	Interface Schematic
1	RF IN	RF Input. This pin is not DC-blocked, and an external blocking capacitor is required. The value depends on the frequency used. The DC value on this pin is approximately equal to VDD.	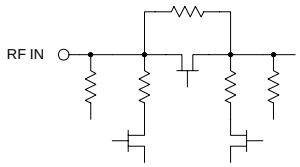
2	VDD	VDD supply connection. Bypassing is critical: To achieve maximum attenuation range the magnitude of the impedance at the operation frequency, as seen from the package pins, needs to be less than 0.5Ω. The DC source to the pin may be a logic driver gate to implement a Power Down function.	
3	VDD	Same as pin 2.	
4	VDD	Same as pin 2.	
5	VDD	Same as pin 2.	
6	VDD	Same as pin 2.	
7	VDD	Same as pin 2.	
8	VDD	Same as pin 2.	
9	RF OUT	RF Output. Same as pin 1. Pin 1 and 9 are interchangeable.	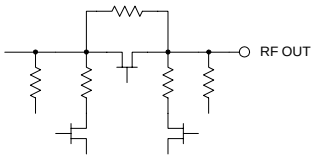
10	G20	Control pin for the 20dB attenuator. This pin has an internal pull-down resistor, so when the pin is not connected the attenuator will be turned off.	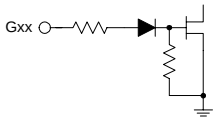
11	G10	Control pin for the 10dB attenuator. This pin has an internal pull-down resistor, so when the pin is not connected the attenuator will be turned off.	Same as pin 10.
12	GND	Ground.	
13	GND	Ground.	
14	G8	Control pin for the 8dB attenuator. This pin has an internal pull-down resistor, so when the pin is not connected the attenuator will be turned off.	Same as pin 10.
15	G4	Control pin for the 4dB attenuator. This pin has an internal pull-down resistor, so when the pin is not connected the attenuator will be turned off.	Same as pin 10.
16	G2	Control pin for the 2dB attenuator. This pin has an internal pull-down resistor, so when the pin is not connected the attenuator will be turned off.	Same as pin 10.

Evaluation Board Schematic

(Download Bill of Materials from www.rfmd.com.)

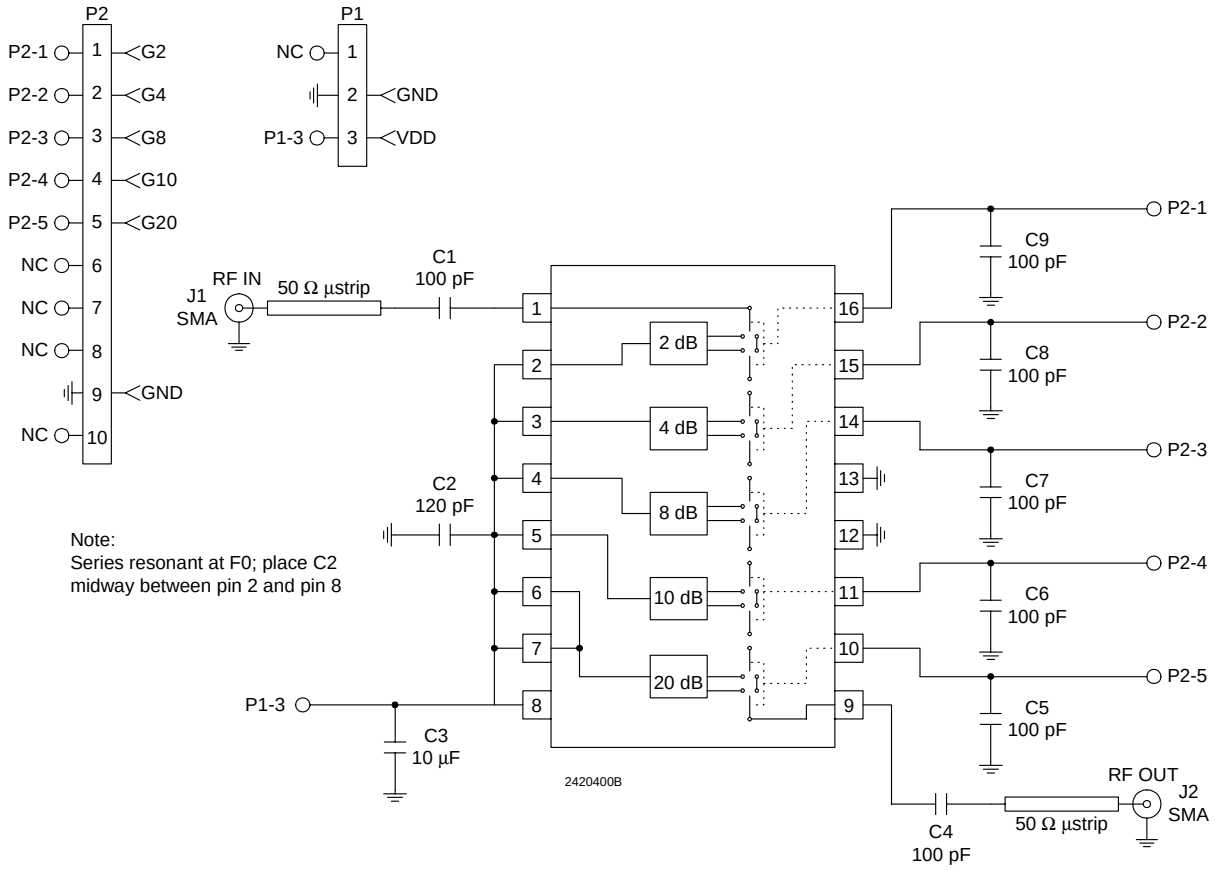

Note:
Series resonant at F0; place C2 midway between pin 2 and pin 8

Evaluation Board Layout
Board Size 2.020” x 2.020”
Board Thickness 0.031”, Board Material FR-4